Form 16962
(1236)

ADJUSTER'S MANUAL

FOR

SINGER MACHINES

201-1, 201-2, 201-3, 201-4 AND 1200-1

LOCK STITCH REVERSIBLE FEED
FOR FAMILY USE

SINGER P. H. MOTORS

AND

SINGER B. R. MOTORS

AND BAKELITE CONTROLLERS

THE SINGER MANUFACTURING CO.

PRINTED IN U. S. A.

To all whom it may concern:

The placing or renewal of the name "Singer" (Reg. U. S. Pat. Off.) or any of the trade marks of The Singer Manufacturing Company on any machine that has been repaired, rebuilt, reconditioned or altered in any way whatsoever outside a Singer factory or an authorized Singer agency is forbidden.

Purchasing of Parts and Needles

Supplies of parts and needles for Singer machines can be purchased at any Singer Shop or ordered by mail. If orders are sent by mail, money or a post office order covering their value, including postage, should be enclosed and the order will then be promptly filled and forwarded by mail or express.

Genuine Singer Needles should be used in Singer Machines. These Needles and their Containers are marked with the Company's Trade Mark "SIMANCO."	1

Needles in Containers marked "For Singer Machines" are not Singer made needles.	2

Copyright, U. S. A., 1921, 1931, 1932, 1935 and 1936, by The Singer Manufacturing Co.
All Rights Reserved for all Countries

FORM 18962

ADJUSTER'S MANUAL

FOR

SINGER MACHINES

201-1, 201-2, 201-3, 201-4

AND 1200-1

LOCK STITCH REVERSIBLE FEED

FOR FAMILY USE

SINGER P. H. MOTORS

AND

SINGER B. R. MOTORS

AND BAKELITE CONTROLLERS

MACHINE 201-2

THE SINGER MANUFACTURING CO.

INDEX

PAGE

ARM SHAFT
- To Remove and Replace Horizontal Arm Shaft, Horizontal Arm Shaft Bushing, Horizontal Arm Shaft Gear and Counterbalanced Feed Cam and Feed Lifting Eccentric.. 62–66
- To Remove and Replace Upright Arm Shaft and Upright Arm Shaft Gears 61, 62

BALANCE WHEEL
- To Remove and Replace Balance Wheel (Machine 201-2)... 26
- To Disassemble and Reassemble Balance Wheel (Mch. 201-2) 27, 28

BELT
- To Adjust Belt Tension (Machine 201-3) 36

BOBBIN CASE
- To Remove and Replace 42

BOBBIN WINDER
- To Adjust 54

BAKELITE CONTROLLERS—For Machines 201-2 and 201-3..... 37–41
- Application of Convertible Foot and Knee Controller to Cabinet 48 ..... 9, 10
- Emergency Adjustment of Carbon Resistance Unit of Treadle, Knee and Foot Controllers 38–40

DESCRIPTIONS OF MACHINES..... 4

ELECTRICAL CONNECTIONS—For Machines 201-2 and 201-3... 6– 8
- To Inspect Electrical Connections (Machine 201-2) 13–25
- To Inspect Electrical Connections (Machine 201-3)..... 28–36

FEEDING MECHANISM
- Feed Connecting Rod—To Remove and Replace..... 57–59
- Feed Dog—To Remove and Replace..... 42
  - To Raise or Lower..... 50
  - To Adjust Lengthwise in Throat Plate Slots..... 50
  - To Adjust Centrally in Throat Plate Slots..... 51

FEED FORKED CONNECTION AND FEED REGULATOR
- To Remove and Replace..... 59, 60

PRESSER BAR—To Adjust..... 55
- To Remove and Replace..... 55

LUBRICATION
- To Lubricate the Motor (Machine 201-2)..... 26
- To Lubricate the Motor (Machine 201-3)..... 36
- To Oil the Machine..... 67, 68

INDEX—*Continued*

PAGE

MOTORS
- Causes of Incorrect Speed or Failure to Run . . . 11–13
- Description of Motors for Machines 201–2 and 201–3 . . . 4–6
- To Remove Motor from Machine 201–2 . . . 21
- To Remove Motor from Machine 201–3 . . . 31
- To Disassemble and Reassemble Motor (Machine 201–2) . . . 22–25
- To Disassemble and Reassemble Motor (Machine 201–3) . . . 31–35
- To Replace Motor (Machine 201–2) . . . 25
- To Replace Motor (Machine 201–3) . . . 36

POSITION PLATE
- To Remove and Replace . . . 43

SINGERLIGHT
- To Remove and Replace Singerlight and Singerlight Leads (Machine 201–2) . . . 14–19
- To Disassemble and Reassemble Singerlight (Mch. 201–2) . . . 15
- To Remove and Replace Singerlight (Machine 201–3) . . . 28–30
- To Disassemble and Reassemble Singerlight (Mch. 201–3) . . . 29–30

STITCHING MECHANISM
- Needle Bar—To Set at Correct Height . . . 46
  - To Remove and Replace . . . 56, 57
- Rotating Hook—To Time . . . 44, 45
  - To Remove and Replace . . . 43
- Rotating Hook Shaft and Rotating Hook Shaft Gear
  - To Remove and Replace . . . 46, 47
- Rotating Hook Driving Shaft and Rotating Hook Driving Shaft Gears
  - To Remove and Replace . . . 47–49

THREAD CONTROL MECHANISM
- Needle Thread Tension—To Remove and Disassemble . . . 52
- To Reassemble and Replace . . . 52–54

DESCRIPTIONS

All of the Class 201 lock stitch, adjustable reverse feed Machines for family use are equipped with a horizontal rotating sewing hook which makes two revolutions to each stroke of the needle bar. The rotating sewing hook takes the loop from the left side of the needle, thus forming a perfect stitch in both forward and reverse directions.

These machines are all equipped with a feed throw-out device by means of which the feed dog can be lowered, when desired, so that the feed dog teeth do not project above the top surface of the throat plate.

They are all equipped with thread tension having a graduated scale for accurately and conveniently adjusting the needle thread tension.

They are all equipped with a hinged presser foot.

Machine 201-1 is equipped for foot power operation only on a treadle stand.

Machine 201-2 is motor driven through gears, having the Singer P. H. Motor built on the back of its arm, and is equipped with Singer Carbon Controller.

Machine 201-3 is motor driven through a belt, being equipped with Singer B. R. Motor and Singer Carbon Controller.

Machine 201-4 is equipped for hand operation only.

Machine 1200-1 is the same as Machine 201-2, except that it is equipped with knee lifter for raising the presser foot.

Motors for Machines 201-2 and 201-3

These motors are operated on either alternating current or direct current, but the motor **rating** must be selected to correspond with the electric current available. Therefore, before connecting the motor to the electric service line, check the data stamped on the motor name plate with the local Electric Company to make sure that the volts and cycles agree.

Carefully observe these instructions when selecting the motor from the lists on the following page:

Singer P. H. Motors for Machine 201-2

The Singer P. H. Motors, which are built on the No. 201-2 Machine, are listed next below:

VOLTS	CURRENT	MOTOR CATALOGUE NO.
6		P. H. 7-16
12		P. H. 7-17
25	Direct Current Only	P. H. 7-18
32		P. H. 3
50		P. H. 5
95-100		P. H. 6
100-110		P. H. 7
115-125	Direct Current	P. H. 8
150-165	and 25 to 75 Cycles	P. H. 9
200-220	Alternating Current	P. H. 10
210-230		P. H. 11
230-250		P. H. 12
130-145		P. H. 15
100-110		P. H. 87
200-220	80 to 100 Cycles	P. H. 90
230-250	Alternating Current	P. H. 92

Singer B. R. Motors for Machine 201-3

The Singer B. R. Motors for Machine 201-3 are listed next below:

VOLTS	CURRENT	MOTOR CATALOGUE NO.
32	Direct Current Only	B. R. 3
50		B. R. 5
95-100		B. R. 6
100-110		B. R. 7
115-125	Direct Current	B. R. 8
150-165	and 25 to 75 Cycle	B. R. 9
200-220	Alternating Current	B. R. 10
210-230		B. R. 11
230-250		B. R. 12
130-145		B. R. 15
100-110		B. R. 87
200-220	80 to 100 Cycles	B. R. 90
230-250	Alternating Current	B. R. 92

Only rarely is a supply of electricity found where none of the motors listed is suitable. In such cases, the factory should be consulted regarding the possibility of supplying a special motor.

To Insure Correct Demonstration of Machine

Be sure that the voltage range specified on the motor name plate is within the range of voltage of the electric service line. **A higher service line voltage will produce excessive speed and will cause damage to the motor, while a lower voltage will cause the motor to operate too slowly.**

IMPORTANT

Before operating the machine, see that it and the motor are properly lubricated.

See *"To Lubricate the Motor,"* pages 26 and 36, and *"To Oil the Machine,"* pages 67 and 68.

Electrical Connections for Machines 201-2 and 201-3

The pins of the three-pin terminal are numbered 1, 2 and 3. The numbers 1 and 3 are yellow and red respectively, while pin number 2 is uncolored.

For Machine 201-2, the leads from the Singerlight for pins 1 and 3 have tracer threads of corresponding colors running through them.

For Machine 201-3, the leads from Singerlight for pins 1 and 3 have yellow and red identification tubing respectively.

For both machines—One of the **controller** leads has yellow identification tubing, while the lead for attachment to the uncolored pin, No. 2, is without identification tubing. One of the **motor** leads has red identification tubing, while the lead for attachment to the uncolored pin No. 2, is without identification tubing.

The lead cord for the power supply is provided with a plug for the electric outlet; also a plug for the three-pin terminal. The three-pin terminal plug is marked with the numerals 1, 2 and 3 to correspond with the pin numbers of the three-pin terminal. The power leads are connected to terminals 1 and 3 of the three-pin terminal plug. These two wires are knotted together as shown in Figs. 13 and 14.

The switch for the Singerlight with which Machine 201-2 is equipped is housed in the three-pin terminal.

The switch for the Singerlight for Machine 201-3 is integral with the Singerlight.

The connections are made as follows:

Machine 201-2, Singer P. H. Motor, Singerlight and Controller

(See Fig. 2, Wiring Diagram)

Motor Leads—Fasten the lead with the **red** identification tubing to the **red** pin No. 3, and fasten the lead without identification tubing, to the middle pin No. 2, as illustrated in Fig. 2.

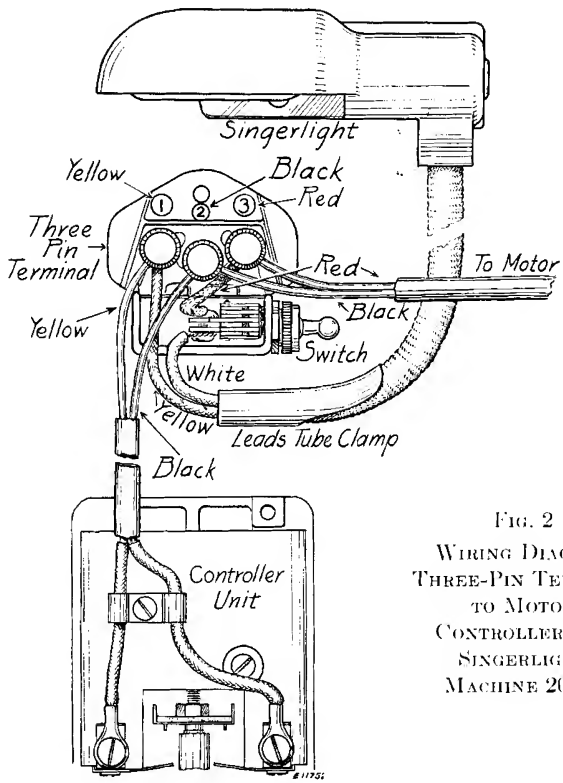

Fig. 2
Wiring Diagram
Three-Pin Terminal
to Motor
Controller and
Singerlight
Machine 201-2

Singerlight Leads—Fasten the lead with the **yellow** tracer thread to the **yellow** pin No. 1. The Singerlight **white** lead is attached to the screw connection of the Singerlight switch. The short **red** lead which is soldered to the Singerlight switch, should be fastened to the **red** pin No. 3.

Controller Leads—Fasten the lead with the **yellow** identification tubing to the **yellow** pin No. 1, and fasten the lead without identification tubing to the middle pin No. 2.

Machine 201-3, Singer B. R. Motor, Singerlight and Controller

(See Fig. 3, Wiring Diagram)

Motor Leads—Fasten the lead with the **red** identification tubing to the **red** pin No. 3, and fasten the lead without identification tubing to the middle pin No. 2, as illustrated in Fig. 3.

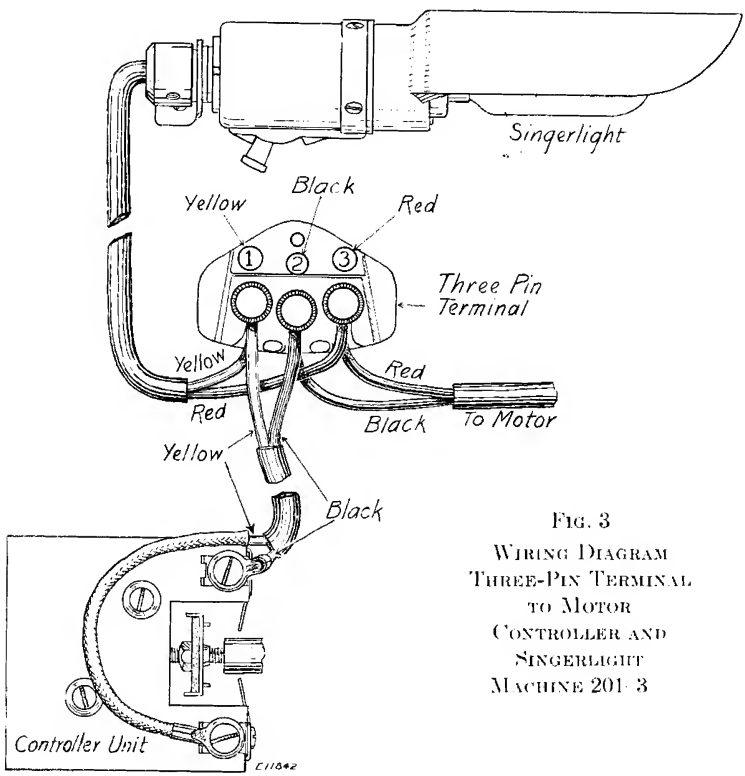

Fig. 3
Wiring Diagram
Three-Pin Terminal
to Motor
Controller and
Singerlight
Machine 201-3

Singerlight Leads—Fasten the lead with the **yellow** identification tubing to the **yellow** pin No. 1, and fasten the lead with the **red** identification tubing to the **red** pin No. 3.

Controller Leads—Fasten the lead with the **yellow** identification tubing to the **yellow** pin No. 1, and fasten the lead without identification tubing to the middle pin No. 2.

INSTRUCTIONS FOR USING THE BAKELITE CONTROLLER FOR FOOT OR KNEE OPERATION WITH CABINET 48

For instructions covering the care and adjustment of the Bakelite Treadle Controller and Convertible Foot and Knee Controller, see pages 37 to 41 inclusive.

When Used for Foot Control

Slide the controller downward out of the holder (B) and place it on the floor in a position convenient for the operator, then turn up the knee lever (A) as shown in Fig. 4.

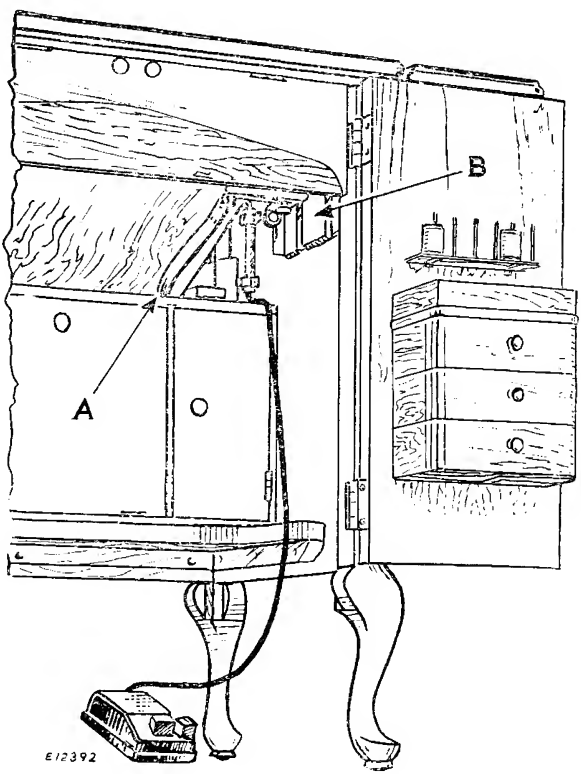

FIG. 4. BAKELITE CONTROLLER ARRANGED FOR FOOT CONTROL WITH CABINET 48

When Used for Knee Control

Insert the controller upward into the holder (B) with the pedal (E) toward you and the base of the controller in the side guides (C). Push up the controller until it rests against the stops (D), only one of which is visible in Fig. 5.

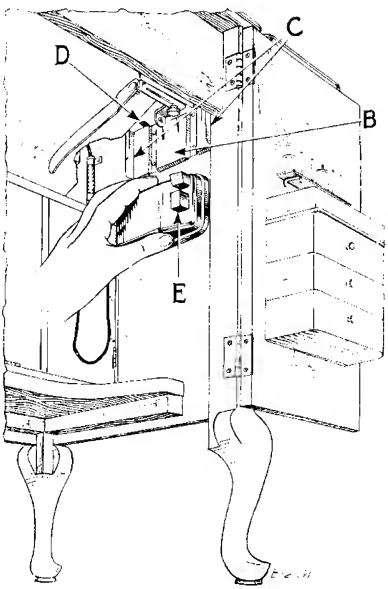

Fig. 5. Placing Bakelite Controller in Cabinet 48 for Knee Control

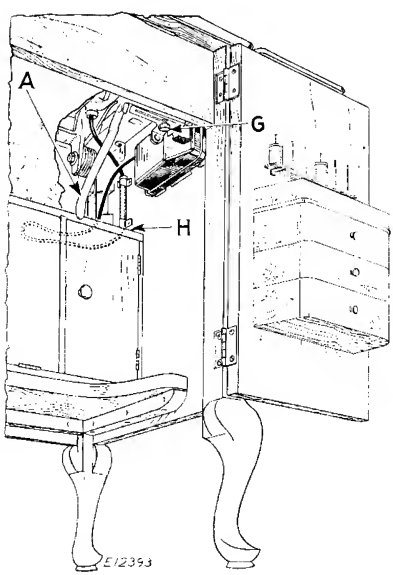

Fig. 6. Bakelite Controller Arranged for Knee Control in Cabinet 48

Place the slack controller lead to the rear on the shelf of the cabinet, as shown at (H) in Fig. 6, no hook being required to hold the slack lead.

Turn down the knee lever (A). Loosen the thumb screw (G) and move the knee lever to the right or left to bring the knee lever (A) to the position best suited for the operator, then tighten the thumb screw (G).

CAUSES OF TROUBLE WITH MACHINES OF CLASS 201

Machines of Class 201 may fail to run properly due to damage after final factory inspection.

Machines 201-2 and 201-3 might fail to start or might run too fast or too slowly due to such damage or to improper selection of motors.

Trouble with any of the Class 201 Machines might also be due to the following causes:

Causes of Low Speed or Failure to Run

1. Heavy or Gummed Lubricant. If the sewing machine has not been run for some time, the lubricant may have become heavy, thereby reducing normal speed and, in the case of Machines 201-1 and 201-4, making undue effort necessary for its operation. To overcome this, run the machine unthreaded for a few minutes with the presser foot raised. If a poor grade of lubricant has been used and has become gummy, wash off all of the lubricant from the sewing machine with kerosene, dry with a clean cloth and re-lubricate with Singer oil.

2. Too Much Presser Foot Pressure. Pressure should be as light as possible with positive feeding of the material.

3. Machine Binds. Determine this by rotating the balance wheel slowly, by hand, in the direction for sewing. If the machine binds, do not run it until all of the working parts have been inspected and any defects corrected. By disconnecting the lower end of the feed connecting rod from the feed lifting rock shaft, also the lower end of the feed forked connection from the feed rock shaft, it will be easy to determine whether binding occurs in the arm or in the bed of the machine. See pages 57 to 60, which cover the removal and replacement of the feed connecting rod and the feed forked connection. Also bear in mind that a dry machine will bind and should be lubricated with Singer oil.

MOTOR CAUSES OF TROUBLE WITH MACHINES 201-2 AND 201-3

4. Electric Current Not Turned On.

5. Loose or Broken Electrical Connections. Examine carefully all plugs and connections (Machine 201-2) on pages 13 to 25 inclusive, or (Machine 201-3) on pages 28 to 36 inclusive, and make sure that there are no broken wires and that all screwed and soldered connections are tight.

If the pins of the three-pin terminal fit loosely in the three-pin terminal plug, slightly spread apart the prongs of the pins. These pins (C4) are shown in connection with Machine 201-2

in Figs. 7 and 15, pages 13 and 21; also in connection with Machine 201-3 in Fig. 22, page 31.

6. Motor Not Suited for Electric Supply. Make sure that the volts and cycles, stamped on the name plate of the motor, agree with the electric current available. If the motor is run on a voltage lower than that stamped on the name plate, the speed of the motor will be too slow. If the motor is run on a voltage higher than that stamped on the name plate, the speed of the motor will be too fast and cause damage. See "Motors for Machines 201-2 and 201-3," pages 4, 5 and 6.

7. Dirty Commutator. See that there is no carbon or grease on the commutator, and that it is smooth. See "Inspect and Clean the Armature" (Machine 201-2) pages 22 and 23, or (Machine 201-3) pages 32 and 33.

8. Carbon Brushes Not Making Contact. This may be due to brushes sticking in the brush tubes, or to grease on the commutator. See "Clean Brushes and Brush Tubes" (Machine 201-2) page 23, or (Machine 201-3) page 34. See also "Remove Brushes" (Machine 201-2) page 22, or (Machine 201-3) page 32, and "Replace Brushes" (Machine 201-2) page 25, or (Machine 201-3) page 35.

9. Armature Binding. To determine whether or not the armature binds, proceed as instructed under (*a*) or (*b*) following:

(*a*). **Machine 201-2.** Remove the motor cover as instructed on page 22, then, to disengage the motor from the balance wheel, remove the balance wheel as instructed on page 26. The removal of the motor cover exposes the free end of the armature. With the fingertips rotate the armature.

(*b*). **Machine 201-3.** Remove the belt from the motor pulley and, by means of the pulley, rotate the armature by hand.

Causes of Binding:
Machines 201-2 and 201-3

(*c*). Grease wicks and tubes may be dry. See lubricating instructions on pages 26 and 36 respectively.

(*d*). Armature striking field coils.

(*e*). Foreign substances in the armature shaft bearings. Grease wicks must be removed from the shaft bearings before replacement of the armature shaft. See "Replace Armature" (Machine 201-2) pages 24 and 25, or "Replace Armature" (Machine 201-3) page 34, and "Replace Pulley End Cover" (Machine 201-3) page 35.

(*f*) The armature shaft may be bent. If so, the armature should be replaced.

Machine 201-2 Only

(*g*) Brush tubes rubbing on the commutator. This might occur with the brush tubes not properly positioned in the insulating bushings. See "Remove and Replace Brush Tubes," page 23.

Machine 201-3 Only

(*h*) Motor end covers not properly seated and tightened. See "Replace Commutator End Cover," page 34, and "Replace Pulley End Cover," page 35.

10. Broken Armature Wires. See that the fine wiring on the end of the armature is not broken. See "Inspect and Clean the Armature" (Machine 201-2) pages 22 and 23, or (Machine 201-3) pages 32 and 33.

11. Controller Not Properly Adjusted. See instructions (Machine 201-2) and (Machine 201-3) on pages 37 to 41 inclusive.

TO INSPECT ELECTRICAL CONNECTIONS

Machine 201-2

Three-Pin Terminal. Remove the screw (A4, Fig. 7) to displace the three-pin terminal (B4) from its bracket (V4) on the machine arm. While the the removal of the three-pin terminal bracket (V4) is not essential, it is recommended when inspecting the connections at the three-pin terminal. This bracket is removed by taking out the screw at (F13, Fig. 10).

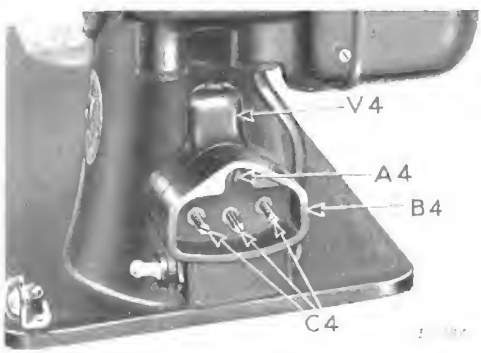

Fig. 7. Three-Pin Terminal in Place on Machine 201-2

Inspect the connections at the three thumb nuts (Q4, Fig. 10). See that they are screwed down firmly to insure tight connections. Each of the three pins is provided with a washer. See that this washer is, in each case, placed above the wire or wires before tightening the thumb nuts (Q4, Fig. 10).

Motor—Machine 201-2. To inspect the connections in the motor, remove the motor from the machine as instructed on page 21.

Inspect the soldered connections (R, Fig. 17) at the brush tubes.

See "Replace Field Core with Coils," page 23.

Replace the motor as instructed on page 25.

Singerlight—Machine 201-2. To inspect the Singerlight connections, it is not necessary to disconnect the Singerlight leads from the three-pin terminal, nor is it necessary to remove the

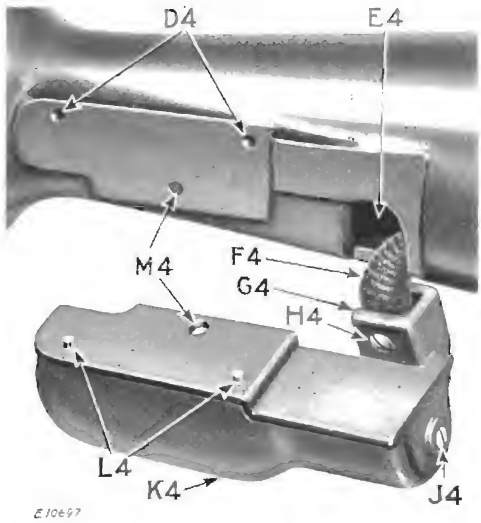

Fig. 8. Singerlight Removed from Machine 201-2

leads from the machine arm. It is necessary, however, to remove the complete Singerlight from the machine as shown in Fig. 8, by removing the screw at (M4, Fig. 8), after which the Singerlight can be disassembled as follows:

Remove Singerlight Shade—Machine 201-2. With the Singerlight removed as shown in Fig. 8, remove the screw (J4) which fastens the Singerlight socket (Y4, Fig. 9) in the base of the Singerlight shade (K4), and loosen the screw (H4) which retains the leads tube at its upper end (F4) in the entrance (G4) of the Singerlight shade. The Singerlight shade (K4) is then easily slipped from the upper end of the leads tube and the lamp socket by withdrawing the shade to the right.

Inspect Singerlight Connections—Machine 201-2. With the Singerlight shade removed as instructed on the preceding page, take out the two screws (B5, Fig. 9) which fasten the Singerlight socket cap (A5) to the socket body. Carefully inspect the two soldered connections (F5) to make sure that they are tight.

Reassemble the Singerlight—Machine 201-2. Reverse the foregoing instructions for disassembling, making certain that the cap (A5) is seated firmly on the lamp socket (Y4), then insert and tighten the two screws (B5) through the holes (D5) in the

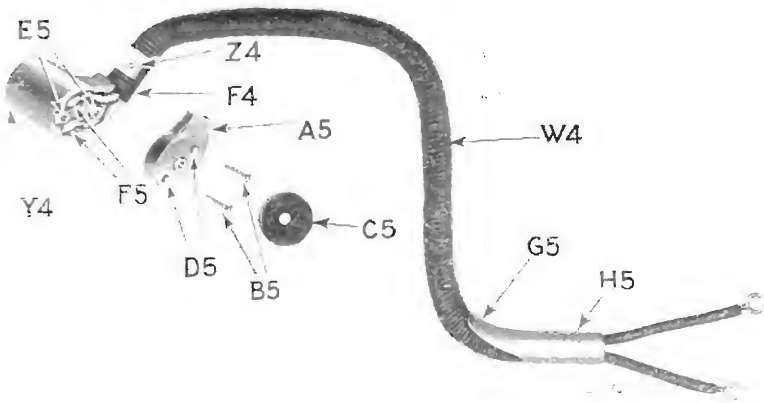

Fig. 9. Singerlight Disassembled Leads Removed from Machine 201-2

cap and into the holes (E5) in the lamp socket body. Put the felt washer (C5) on the cap (A5) and put the assembled lamp socket in place in the Singerlight shade base with the upper end (F4) of the leads tube in the entrance (G4, Fig. 8) of the shade, and with the fibre clamping plate (Z4) in place against the upper end (F4) of the leads tube where the set screw (H4, Fig. 8) will be tightened against it. Insert and tighten the screw (J4, Fig. 8), thus fastening the lamp socket (Y4) into the base of the shade (K4, Fig. 8) and carefully tighten the set screw (H4, Fig. 8) against the fibre clamping plate (Z4).

Replace Singerlight—Machine 201-2. Attach the completely assembled Singerlight to the machine arm, having the two pins (L4, Fig. 8) in the holes (D4, Fig. 8). Tighten the screw at (M4, Fig. 8).

To Remove Singerlight Leads from the Machine Arm Machine 201-2

Remove the Three-Pin Terminal as instructed on page 13.

Disconnect the yellow Singerlight lead from Pin No. 1 of the three-pin terminal, and disconnect, at Pin No. 3, the red lead which is soldered to the Singerlight switch (T4, Fig. 10).

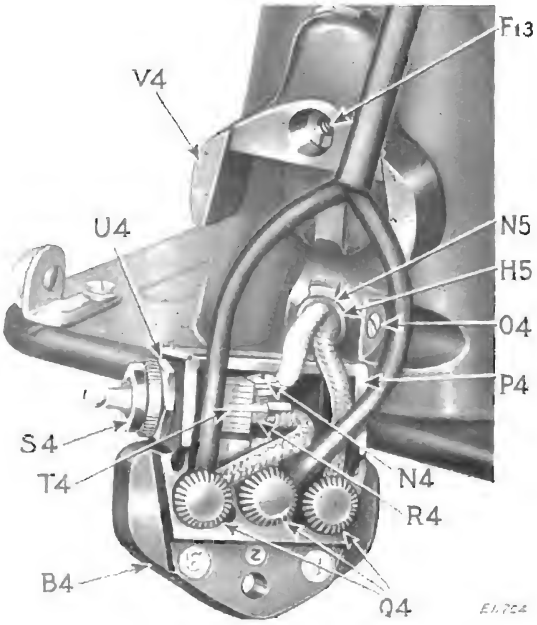

Fig. 10. Three-Pin Terminal Displaced from Machine Arm Showing Connections at Three-Pin Terminal and Switch (Machine 201-2)

Remove the knurled thumb nut (S4) and the hexagon lock nut (U4) from the screw nipple of the Singerlight switch (T4). Then carefully push the entire switch, including the switch handle, back into the switch housing (P4), and lift the entire switch (T4) from the housing (P4) with the Singerlight white lead and the short red lead attached. With the switch (T4) removed from the housing (P4), the screw connection (N4) and the soldered connection (R4) are accessible. Remove the screw (N4) and disconnect the Singerlight white lead from the switch (T4).

Remove the Singerlight from the machine as instructed on page 14.

Loosen set screw (O4, Fig. 10) to release the clamp (H5, Figs. 9 and 10) which holds the three-pin terminal end of the leads tube (W4, Fig. 11) containing the Singerlight leads.

FIG. 11. STITCH INDICATOR PLATE REMOVED TO SHOW THE POSITION OF SINGERLIGHT LEADS IN THE ARM OF MACHINE 201-2

Before removing the Singerlight leads from the machine arm, be sure to observe the position of the leads tube (W4) in the machine arm, so that it will be replaced in the same position as before removal.

The position of the tube (W4) can be observed conveniently through the opening (X4) uncovered by the removal of the stitch indicator plate. This plate is removed by taking out the two screws by which it is fastened to the machine arm. The lower end of the tube (W4) can be observed through the opening (K5, Fig. 12) in the bed of the machine.

The Singerlight shade may be removed either now or after the removal of the leads tube (W4) from the machine arm. The shade is removed as instructed in the last paragraph of page 14.

Withdraw the tube (W4) from the machine arm through the opening (E4, Fig. 8), together with the clamp (H5, Figs. 9 and 10), or remove the clamp (H5) separately from the tube through the opening (K5, Fig. 12) in the machine bed.

Should it be necessary to disassemble the Singerlight, follow the instructions under "Inspect Singerlight Connections," page 15, and reassemble the Singerlight as instructed on page 15.

Replace the Singerlight leads as instructed on pages 18 and 19.

To Replace the Singerlight Leads
Machine 201-2

With the Singerlight completely disassembled, as shown in Fig. 9, insert the tube (W4, Figs. 9 and 12) with the clamp (H5, Figs. 9 and 12) in place thereon, into the Singerlight seat opening

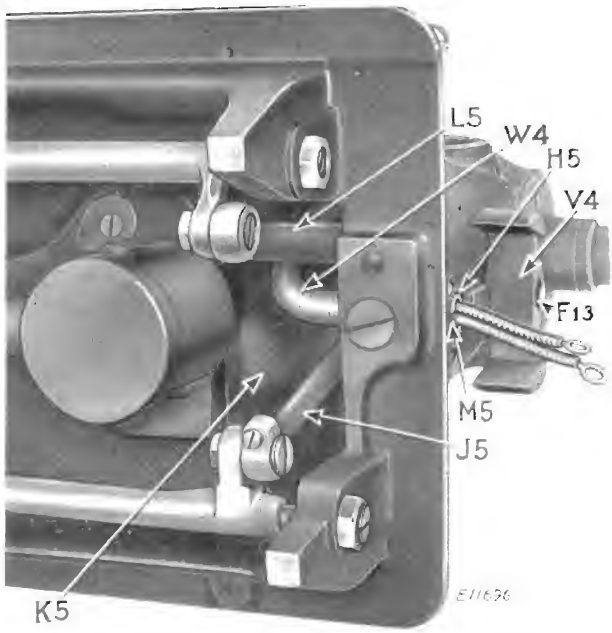

Fig. 12. Showing Position of the Singerlight Leads View Through the Opening in the Machine Bed (Machine 201-2)

(E4, Fig. 8) in the machine arm, and move the tube (W4) containing the Singerlight leads back toward the balance wheel, at the same time keeping the tube (W4) at the front side (toward the operator) of the horizontal arm shaft in the machine arm; then, reaching through the opening (X4, Fig. 11), guide the tube (W4) downward while keeping this tube at the front side (toward the operator) of the upright arm shaft as shown in Fig. 11. While guiding the tube (W4) downward toward the leads opening at the three-pin terminal seat, keep this tube to the left of the feed connecting rod (L5, Fig. 12). From this point downward, the tube (W4) is guided by reaching through the opening (K5) in the machine bed. Guide the tube (W4) downward and to the

left of the connecting rod (L5) and then to the right and between the connecting rod (L5) and the feed forked connection (J5, Fig. 12); then insert the clamp (H5, Figs. 9 and 12) in its opening (N5, Fig. 10) just below the three-pin terminal bracket (V4, Fig. 12) and with its outer end about flush with the outside surface of the machine arm, and with the split (M5, Fig. 12) down to bring the curved side (G5, Fig. 9) up toward the top of the machine so that the curve (G5) will conform to the upward bend of the tube (W4, Figs. 9 and 12). Also make sure that the tube (W4) is positioned so that it will not obstruct any of the moving parts such as the connecting rod (L5, Fig. 12) and the feed forked connection (J5, Fig. 12), etc.

When the leads tube (W4) is correctly positioned in the machine arm, and the clamp (H5) is properly inserted in its opening, as shown in Fig. 12, securely tighten the clamp set screw (O4, Fig. 10).

Attach the Singerlight white lead to the screw connection (N4, Fig. 10) of the Singerlight switch (T4, Fig. 10) and place the switch (T4) in the switch housing (P4, Fig. 10) of the three-pin terminal, then push the screw nipple (into which the switch handle is fastened) through the opening for this purpose in the side of the switch housing. The screw nipple is not shown in these illustrations, as it is concealed by the thumb nut (S4, Fig. 10) and hexagon lock nut (U4, Fig. 10).

Be sure to put the switch (T4, Fig. 10) in the housing (P4, Fig. 10) with the screw connection (N4, Fig. 10) on the side of the housing (P4) farthest from the three thumb nuts (Q4) as shown in Fig. 10. Place on the screw nipple, now protruding through the side of the switch housing (P4), the hexagon lock nut (U4) and tighten it, and then put the thumb nut (S4) in place on the screw nipple and tighten this thumb nut.

Fasten the short red lead (which is soldered to the switch at (R4) as shown in Fig. 10) to pin No. 3 of the three-pin terminal (B4, Fig. 10) and fasten the yellow Singerlight lead to Pin No. 1 of the three-pin terminal.

Replace the Three-Pin Terminal--Machine 201-2. Replace the bracket (V4) and insert and tighten the screw at (F13). Make sure that the three-pin terminal (B4, Figs. 7 and 10) is firmly seated on the bracket (V4) and insert and tighten the screw (A4, Fig. 7).

The Instructions on this Page Apply to Machines 201-2 and 201-3

Three-Pin Terminal Plug, shown in Figs. 13 and 14, has three sleeves (W, Fig. 14) which are engaged by the three pins (C4, Fig. 15) when the plug is pushed into the three-pin terminal block (B4, Fig. 15).

Make sure that these connections are tight and that the hexagon heads of these sleeves are properly seated in the plug, as shown by Fig. 14.

Note that the two wires are knotted together as shown by (V, Figs. 13 and 14). This is to prevent strain or breakage in case the plug is pulled from the three-pin terminal by grasping the wires instead of the plug. Therefore, the knot is placed so that it, instead of the connections, bears the strain when the plug is [illegible] the terminal.

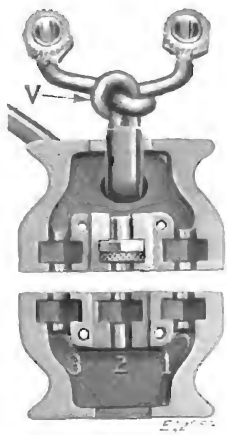

Fig. 13
Terminal Plug
Connections Removed

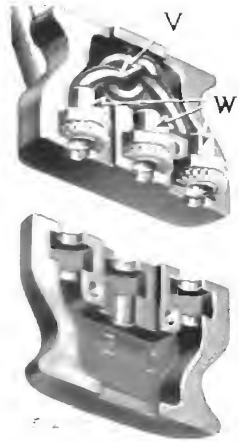

[illegible]

Electric Outlet Plug. See that the wires [illegible] ped about the screw connections, and that the [illegible] firmly tightened.

Singerlight Fails to Light Machines 201-2 and 201-3

This may be due to any of the [illegible]

1. Electric current not turned on.
2. The Singerlight bulb may be [illegible]
3. Singerlight switch not turned on.
4. Loose or broken connections [illegible] at terminals 1 and 3 respectively, [illegible] wires to the terminal posts, are properly [illegible]

Note—The voltage marked on the Singer[illegible] stamped on the name plate of the electric meter [illegible] Light Company.

In ordering bulbs from the factory, specify [illegible] No. 194120, and **state the voltage of the lamp required.**

To Remove and Replace the Bulb
Machines 201-2 and 201-3

Do not attempt to unscrew the bulb. It is of the double contact bayonet candelabra type and does not unscrew. To remove the bulb, press it into the socket and turn it counter-clockwise.

To replace the bulb, press it into the socket and turn it clockwise until the bulb pin enters the notch in the socket.

To Remove the Motor from Machine 201-2

Take out screw (A4, Fig. 15) and remove the three-pin terminal (B4) from the terminal bracket (V4).

Disconnect motor leads from the three-pin terminal. Remove balance wheel as instructed on page 26.

Take out the two screws (O5) and remove, from the machine, motor frame with motor attached.

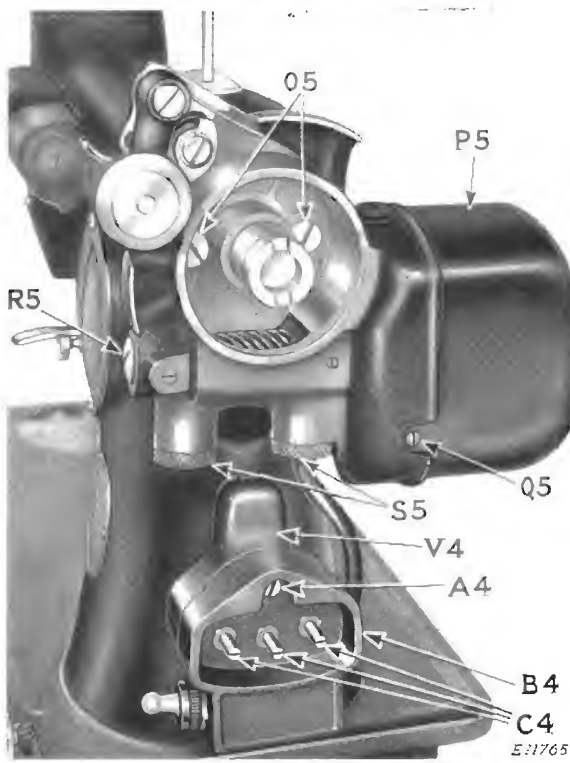

FIG. 15. MACHINE 201-2 AND MOTOR (BALANCE WHEEL REMOVED)

To Disassemble the Motor
Machine 201-2

Remove Motor Cover. Loosen the two screws, one of which is shown at (Q5, Fig. 15) and remove motor cover (P5, Fig. 15) by pulling and, at the same time, rocking it up and down slightly, being careful to prevent inside of cover damaging the field coils.

Remove Brushes—Machine 201-2. Take out screw caps (M, Fig. 17). When the screw caps are removed, the brush springs may protrude from the screw holes, and brushes can then be easily withdrawn. However, should difficulty be experienced in removing the brushes, this can be done conveniently after removal of the armature in accordance with "Remove Armature" following. It is advisable to mark the brushes at (P1 and P2, Fig. 17) to make sure that they will be replaced in the same relative position as before removal.

Remove Armature—Machine 201-2. Remove the brushes in accordance with preceding paragraph. Loosen the two set

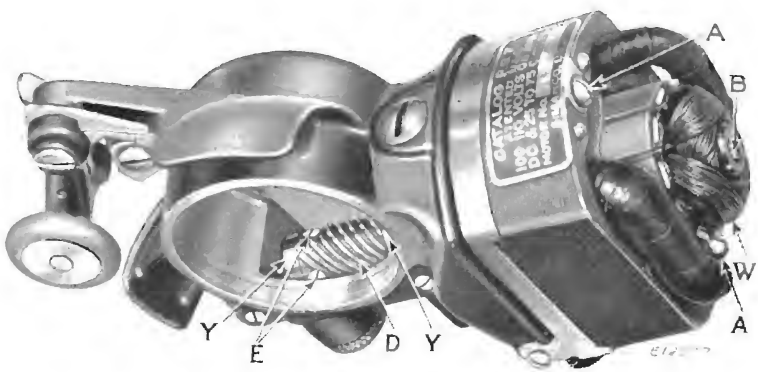

Fig. 16. Motor with Cover Removed
Machine 201-2
(Armature Partly Removed)

screws (E, Fig. 16) in the spiral gear (D, Fig. 16) so that the armature shaft can be withdrawn from its bearings. Remove the armature (W, Fig. 16).

Inspect and Clean the Armature—Machine 201-2. Inspect the armature winding, making sure that the enamel insulation on the winding is not damaged. Damage to the enamel insulation will prevent proper operation of the motor. If any wires are broken, bare or burned, return the complete motor to the factory for repairs.

If wiring is not damaged, clean commutator (V, Fig. 17) with a dry, clean cloth before assembling motor. If it is impossible to get the commutator bright by this means, use an ordinary rubber eraser. **Never use anything else on a small motor commutator.**

Remove the Field Core with Coils—Machine 201-2. Loosen the two screws (A, Fig. 16) and remove the field core (S, Fig. 17) from the commutator end cover which, in this case, is part of the motor frame. The removal of the field core must be done carefully to prevent damage to the field coil insulation, and to prevent strain at the soldered brush tube connections (R, Fig. 17).

Clean Brushes and Brush Tubes—Machine 201-2. Thoroughly clean the carbon brushes (O, Fig. 17), inner walls of brush tubes and inside of end covers, with a dry, clean cloth.

Inspect Wire Connections to Brush Tubes—Machine 201-2. Examine both field wire connections (R, Fig. 17) at the brush tubes. If broken, these connections should be securely soldered to the lugs of the brush tubes. Any loose strands of wire should be cut off.

Remove and Replace Brush Tubes—Machine 201-2. After the brushes and brush tubes have been cleaned, the brushes should slide freely in the brush tubes. If they do not, the brush tubes should be replaced by new ones. The new brush tubes must be replaced in the same manner as the old tubes, viz., firmly positioned in the insulating bushings (Z, Fig. 17), and with the field leads properly soldered to the lugs of the new tubes, as shown by (R, Fig. 17).

Remove and Replace Insulating Bushings—Machine 201-2. If the threads in the insulating bushings (Z, Fig. 17) and on screw caps (M, Fig. 17) become stripped, these parts should be replaced by new ones. When these bushings require replacement, the brush tubes also should be replaced with new ones. Do not attempt to use the old brush tubes in the new bushings. Loosen the two screws at (Q, Fig. 17) to release the bushings (Z, Fig. 17). When the new bushings are in place, tighten the screws (Q, Fig. 17).

To Reassemble the Motor Machine 201-2

Replace the Field Core with Coils. After the insulating bushings are replaced, the field coil wires properly soldered to the brush tubes as shown at (R, Fig. 17) and brush tubes in place in insulating bushings (Z, Fig. 17), put field core (S, Fig. 17) in place on commutator end cover, being careful not to damage field coil insulation. When the field core is properly seated on commutator end cover, insert and tighten screws (A, Fig. 16).

Replace Armature—Machine 201-2. Before replacing the armature, make sure that the wires from the field coils to the brush tubes are safely positioned. Observe the wires through

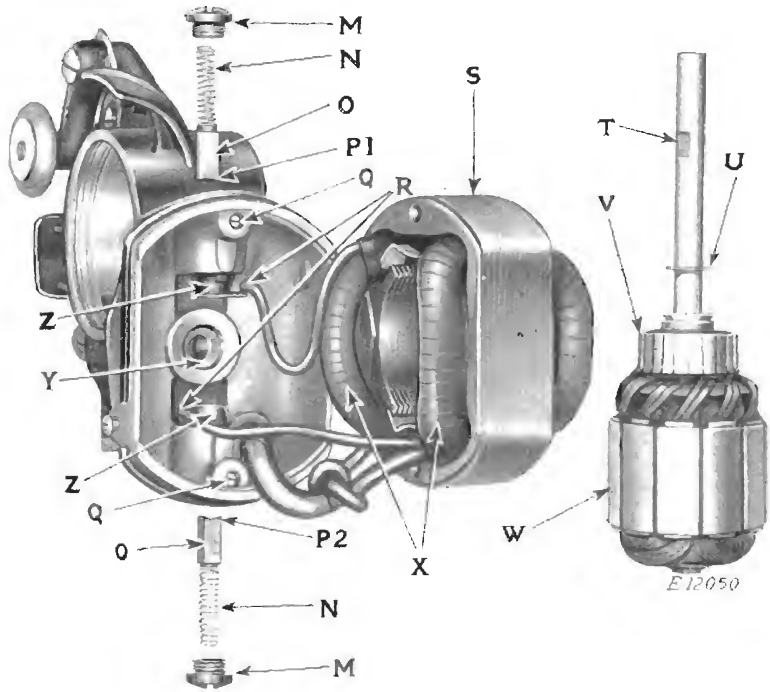

Fig. 17. Motor Disassembled
(Machine 201-2)

the field coils while the motor cover and armature are removed. If the wires are not properly placed (to avoid contact with armature or commutator) they can be reached through the field coils, with cover and armature removed.

When the armature was removed, as instructed on page 22, the spring-pressured grease wick for each of the two bearings (Y) projected into the shaft bearings. Therefore, before replacing the armature and shaft, remove the two grease wicks in order that armature shaft may be inserted in its bearings without damage to the wicks. To do this, remove cap screws (S5, Fig. 15) and, using a small screw driver, carefully remove the grease wick spring retainer, together with grease wick spring and grease wick from each grease cup.

On the outer end of each grease wick spring retainer is a small tab, the purpose of which is to hold the wick spring in place. **Do not bend up these tabs to remove the wicks, as the tabs are very likely to break off at any attempt to bend them.**

Put the spiral gear in position between the two bronze shaft bearings (Y, Fig. 16), having the two set screws (E, Fig. 16) toward the cap screw (R5, Fig. 15) in order that one of the two screws (E) can engage the "flat" (T) on the armature shaft. Insert armature (W) so that the fibre washer (U) is against the first of the two shaft bearings (Y, Fig. 17).

When armature shaft is in place in its bearings and through spiral gear (D, Fig. 16), the "flat" (T), against which one of the two set screws (E, Fig. 16) is to be tightened, is covered. Its position is, however, indicated by the "flat" at (B, Fig. 16) at the cover end of the shaft. Be sure that one of the two screws (E, Fig. 16) engages the "flat" (T), then tighten both screws (E).

Replace the grease wicks, making sure that the inner ends of the wicks are against the armature shaft. Then put the grease wick spring retainers in place in the grease cups, having the tab, at the outer end of each retainer, over the outer end of the grease wick spring. Fill the grease cups and replace cap screws (S5, Fig. 15).

Replace Brushes—Machine 201-2. When inserting the brushes in the brush tubes, make sure that their concave ends (P1 and P2, Fig. 17) correspond with the convex surface of the commutator, and that they are replaced in the same relative position as before removal. See "Remove Brushes," page 22. Hold end of brush spring and tap the brush against the commutator until contact is clearly heard. Then insert and tighten the two screw caps (M, Fig. 17), being careful not to strip the threads.

Attach Motor and Three-Pin Terminal Machine 201-2

Place the motor frame, with motor, on its seat on the machine arm, and insert and tighten the two screws (O5, Fig. 15). Fasten the three-pin terminal (B4) to its bracket (V4) by means of the screw (A4).

Replace the balance wheel as instructed on page 26.

To Lubricate the Motor Machine 201-2

Remove the two cap screws (S5, Fig. 15) from the two grease cups and clean out the interiors of the cups. Insert the tip of the motor lubricant tube into the grease cups and squeeze about a quarter of the tube of lubricant into each grease cup, then replace and tighten the cap screws (S5, Fig. 15).

Never, under any circumstances, use oil in the grease cups or on any part of the motor.

Grease will remain in the bearings, whereas oil works its way onto the commutator and brushes, causing most of the troubles experienced with small motors- slow speed, failure to start, overheating, smoking, etc. These troubles may be remedied by removing the oil from the commutator, brushes and inner walls of brush tubes.

To Remove and Replace Balance Wheel (Machine 201-2)

Loosen stop screw (A, Fig. 18) and remove clamp screw (B, Fig. 18) by unscrewing it. Remove balance wheel together with stop motion clamp washer (C, Fig. 18).

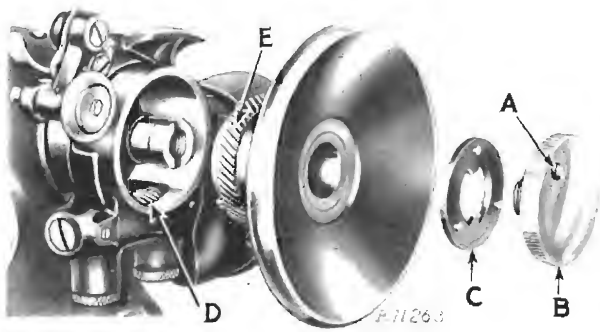

Fig. 18. Balance Wheel Removed (Machine 201-2)

When replacing the balance wheel, be careful not to injure the textolite gear (E, Figs. 18 and 19) when placing it in mesh with the spiral gear (D, Fig. 18) on the armature shaft. Replace stop motion clamp washer (C) so that when the stop screw (A) is tightened, it is a sufficient distance to the right of one of the three studs on the washer (C) to permit enough counter-clockwise rotation of the clamp screw (B) to stop sewing action of the machine during the winding of the bobbins.

To Remove and Replace Balance Wheel Textolite Gear and Shock-Absorbing Spring (Machine 201-2)

Remove the balance wheel as instructed on the preceding page. Loosen the three set screws (G, Fig. 19) and remove balance

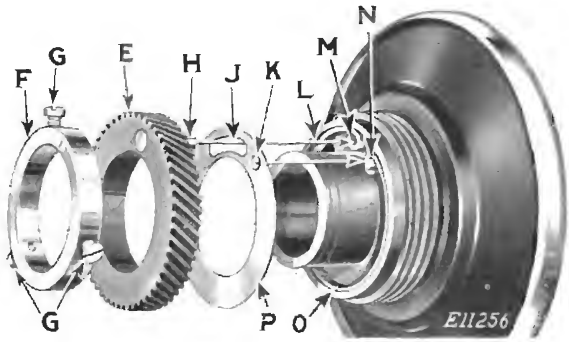

Fig. 19. Balance Wheel Disassembled (Machine 201-2)

wheel gear collar (F) from the balance wheel hub. Then lift off the textolite gear (E). Take off the spring retaining washer (P). The shock-absorbing spring (O) can then be removed from the recessed seat on the shoulder of the balance wheel hub. There are three pins in this recessed seat, the two outer pins being eccentric. The middle pin (N) is for the right hand loop of the spring (O). The duty of the two outer (eccentric) pins is to prevent the two ends of the spring (O) from coming in contact with each other and thus becoming noisy during the functioning of this shock-absorbing spring. Make sure that these three pins are in place in the spring seat.

When replacing these parts, first put the shock-absorbing spring in position, as shown by Fig. 19, with the right hand loop of the spring about the middle pin (N). Then place the spring retaining washer (P) so that the round pin hole (K) engages the pin (N) on which is placed the right hand loop of the shock-absorbing spring (O), as indicated by the unlettered arrow leading from pin-hole (K) to pin (N).

Next put in place the textolite gear (E) with the pin (H) through the slot (J) of the spring retaining washer (P), and into the left hand spring loop (M), as indicated by arrow (L).

BE SURE that the gear pin (H) engages the spring loop (M), as otherwise this shock-absorbing spring (O) will not function.

Replace the gear collar (F, Fig. 19) which retains the textolite gear (E) in place on the balance wheel hub. This collar (F) should be so placed against the textolite gear (E) as to prevent side play, but not to retard the free oscillating movement of the gear during the functioning of the shock-absorbing spring. The use of a .003″ feeler gauge or a piece of ordinary note paper, between gear collar and textolite gear, will establish the proper position of collar (F) relative to textolite gear (E). When collar (F) is properly positioned, tighten the three set screws (G).

Put the assembled balance wheel in place on the machine in accordance with "To Remove and Replace Balance Wheel" page 26.

To Inspect Electrical Connections (Machine 201-3)

The motor, three-pin terminal and Singerlight may be removed as a unit, as shown by Fig. 20, as a matter of convenience when

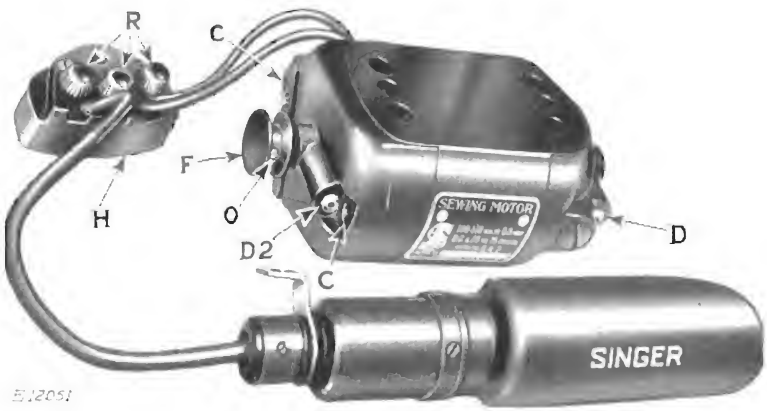

Fig. 20. Motor Three-Pin Terminal and Singerlight (Machine 201-3)

inspecting electrical connections. Take out screw (A4, Fig. 22) and remove the three-pin terminal from its seat on the motor bracket. Disconnect the controller leads from terminals Nos. 1 and 2, and turn aside the arm side cover to expose screw (A3, Fig. 22) which fastens the Singerlight to the sewing machine. Remove screw (A3, Fig. 22) and Singerlight.

Remove the motor as instructed on page 31.

Three-Pin Terminal—Machine 201-3. Inspect the connections at the three thumb nuts (R, Fig. 20). See that these thumb nuts are screwed down firmly to insure tight connections. Each of the three pins is provided with a washer. See that this washer is, in each case, placed above the wire or wires before tightening the thumb nuts.

Motor—Machine 201-3. Disconnect the motor leads from pins Nos. 2 and 3 of the three-pin terminal.

Inspect the soldered connections (F2, Fig. 24) at the brush tubes.

See "Remove Commutator End Cover," page 33.

Singerlight—Machine 201-3. Disconnect the Singerlight leads from pins Nos. 1 and 3 of the three-pin terminal. Draw

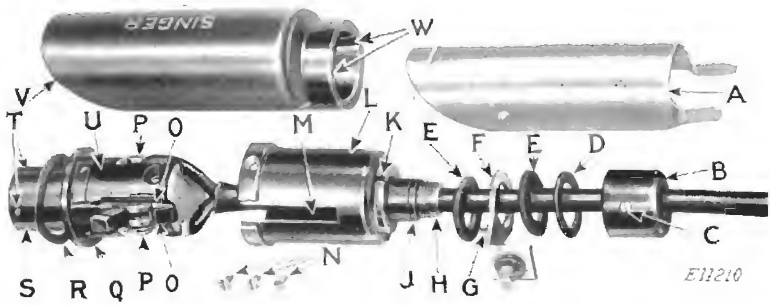

Fig. 21. Showing Screw Connections of Singerlight (Machine 201-3)

the reflector (A, Fig. 21) from the Singerlight shade (V). Turn the shade until the pins (T) on the Singerlight lamp socket (S) reach the slots (W) on the inside of Singerlight shade base, and draw the shade from the lamp socket. Loosen screw (C) in Singerlight nipple cap (B), and unscrew the nipple cap. Draw the nipple cap (B) along the leads and away from the Singerlight shell (L) as shown in Fig. 21. Remove the three screws (N) which fasten the shell (L) to the lamp socket body (U), and draw the shell (L), fibre washer (D), Singerlight bracket (F) and the two felt washers (E) along the leads and away from the lamp socket body (U) as shown in Fig. 21.

Inspect the two screw connections (P). See that they are screwed down firmly and that the wires are unbroken.

Note that the spreader, shown in Fig. 21 at the base of Singerlight body (U), is provided with four notches—two round bottomed notches and two V-notches. The two round bottomed notches are for the Singerlight leads, while the two V-notches are for the two positioning ribs on the inside of shell (L). One side of this spreader—the side which is placed against the lamp socket body (U) as shown in Fig. 21—is marked by a line which connects the two leads notches. When replacing this spreader, be sure to place the leads in the round bottomed notches and have the marked side of the spreader against the lamp socket body (U) as shown in Fig. 21.

When reassembling, push the shell (L) tight against the flange (Q) of the lamp socket body (U) and with the slot (M) engaged by the grooves (O) in the cover plate. Insert and tighten the three screws (N). Put the felt washers, bracket and fibre washer on the screw nipple bushing (J) and against the base of the shell (L) in the following order and as indicated in Fig. 21:

Felt washer (E), Singerlight bracket (F) with bracket pin (G) in notch (K) of shell (L); next put the second felt washer (E) and, last, the fibre washer (D) on the bushing (J). When the washers and Singerlight bracket are placed, as above, on screw nipple bushing (J), screw the nipple cap (B) firmly onto the screw nipple (H), and tighten the screw (C).

Before replacing the Singerlight shade (V, Fig. 21) and reflector (A), be sure to have the spring washer (R) on the lamp socket (S), as shown in Fig. 21.

Singerlight Fails to Light
(Machine 201-3)

See Instructions on Page 20.

To Remove and Replace the Bulb
(Machine 201-3)

See Instructions on Page 21.

Three-Pin Terminal Plug
(Machine 201-3)

See Instructions and Figs. 13 and 14, page 20.

Electric Outlet Plug
(Machine 201-3)

See Instructions on Page 20.

To Remove the Motor from Machine 201-3

Disconnect the motor leads from the three-pin terminal, and remove the belt which connects the motor pulley and the balance wheel of the machine.

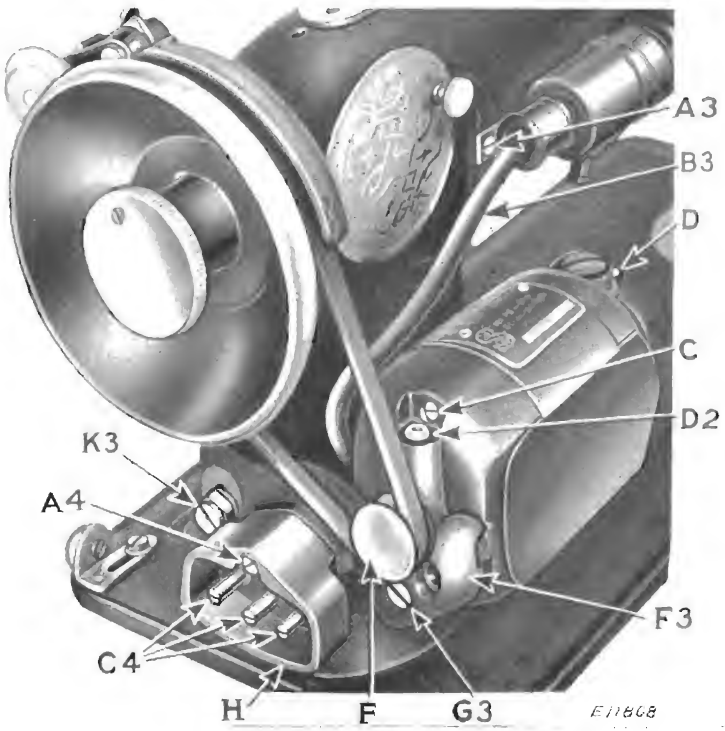

Fig. 22. Motor Singerlight and Three-Pin Terminal in Place on Machine 201-3

Take out screw (G3, Fig. 22) which fastens the motor to its bracket (F3, Fig. 22) and remove the motor.

To Disassemble the Motor (Machine 201-3)

Remove Pulley. Take out screw (O, Fig. 20) and remove the pulley (F, Fig. 20) from the armature shaft.

Remove Pulley End Cover—Machine 201-3. Remove the two through screws (C, Figs. 20 and 22) —only the upper of the

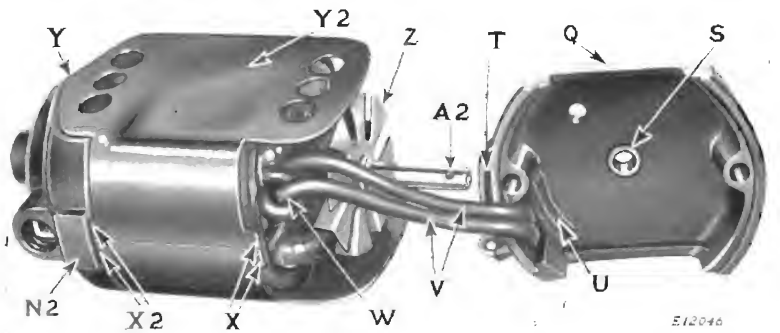

Fig. 23. Motor—Pulley End Cover Removed (Machine 201-3)

two screws (C) is shown in Fig. 22, the lower one being concealed by the motor bracket. Carefully take the pulley end cover (Q, Fig. 23) off the field core (C2, Fig. 24), drawing it to the ends of the motor leads (V) as shown in Fig. 23. **Do not pry it off, as such action would ruin this Bakelite cover.**

Remove Brushes—Machine 201-3. Take out the two screw caps (Z2, Fig. 25). When the screw caps are removed, the brush springs may protrude from the screw holes and the brushes can then be easily withdrawn. In case the brushes stick in the brush tubes, they can be conveniently removed after removal of the armature (G2, Fig. 24). See "Remove Armature" following. It is advisable to mark the brushes at (B1 and B2, Fig. 25) to insure their being replaced in the same relative position as before removal.

Remove Armature—Machine 201-3. The removal of the pulley end cover (Q) exposes the pulley end (A2) of the armature shaft, by means of which carefully withdraw the armature from the motor.

Inspect and Clean the Armature—Machine 201-3. Inspect the armature winding, making sure that the enamel insulation on the winding is not damaged. Damage to the enamel insulation will prevent proper operation of the motor. If any wires are broken, bare or burned, return the complete motor to the factory for repairs.

If the wiring is not damaged, clean the commutator (V2, Fig. 24) with a dry, clean cloth before assembling the motor. If it is impossible to get the commutator bright by this means, use an ordinary rubber eraser. **Never use anything else on a small motor commutator.**

Remove Field Core Shield—Machine 201-3. With the pulley end cover removed, the field core shield (Y2, Fig. 23) is removed from the pulley end of the motor.

Remove Commutator End Cover—Machine 201-3. Be especially careful in taking off the commutator end cover (N2,

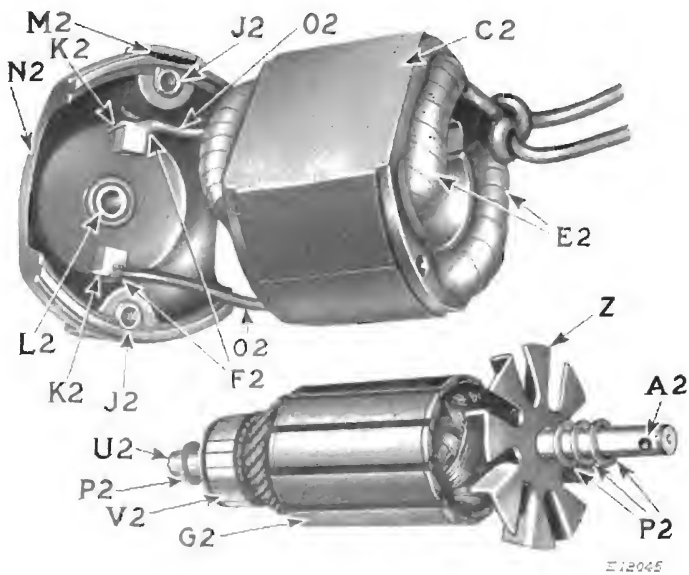

Fig. 21. Motor—Pulley End Cover, Commutator End Cover and Armature Removed
(Machine 201-3)

Fig. 24). With the pulley end cover, armature, core shield and brushes removed, the commutator end cover (N2) should come off very easily. An uncontrolled strong pull or jerk would strain or break the field leads soldered connections (F2) at the brush tubes.

Inspect Wire Connections to Brush Tubes—Machine 201-3. Examine both field lead connections (F2, Fig. 24) at brush tubes. If there are any loose strands of wire, they should be cut off. Make certain that the field leads (O2, Fig. 24) are firmly attached

(clamped and soldered) to the brush tube terminals (K2, Fig. 24) and that the terminals (K2) are firmly soldered to the brush tubes as shown in Fig. 24.

Clean Brushes and Brush Tubes—Machine 201-3. Thoroughly clean the carbon brushes (C, Fig. 25), inner walls of brush tubes and inside of end covers (Q) and (N2) with a clean, dry cloth, after which the brushes should slide freely in the brush tubes.

To Reassemble the Motor (Machine 201-3)

Replace Commutator End Cover. Put the commutator end cover (N2, Fig. 24) in place on the field core (C2, Fig. 24). To make sure that the field leads (O2, Fig. 24) are safely positioned after the commutator end cover is in place on the field core, observe the field leads from the pulley end of the motor with pulley end cover (Q, Fig. 23) and armature (G2, Fig. 24) removed. If the wires are not properly placed (to avoid contact with the armature or commutator) they can be reached through the field coils (E2, Fig. 24) with pulley end cover and armature removed.

Replace Field Core Shield—Machine 201-3. Put the shield (Y2, Fig. 23) on the field core (C2, Fig. 24) with peaked end (Y) of the shield toward commutator end cover (N2) and with the two lugs (X2, Fig. 23) in the slot (M2, Fig. 24) in the commutator end cover (N2).

Replace Armature—Machine 201-3. When the armature shaft was withdrawn from its bearing (L2, Fig. 24) in the commutator end cover, the spring pressured grease wick projected into the shaft bearing (L2). To avoid damage to the grease wick and binding of the armature shaft, the grease wick must be pushed back into the grease wick tube before the armature shaft is reinserted into its bearing in the commutator end cover. Use a small screw driver to push the grease wick back into the grease tube (D, Figs. 20 and 22) while inserting the end (U2) of the armature shaft into the bearing (L2) in the commutator end cover.

Replace Pulley End Cover—Machine 201-3. Push the grease wick up into the grease tube (D2, Figs. 20 and 22) in the pulley end cover (Q, Fig. 23) ,using the method suggested under "Replace Armature" at the bottom of the preceding page. Be sure that the washers (P2, Fig. 24) are on the armature shaft. Put the pulley end cover (Q, Fig. 23) on the field core (C2, Fig. 24) and see that the lugs (X, Fig. 23) of the shield (Y2) enter the slot (T) for the same in the pulley end cover. Pull on the motor leads (V, Fig. 23) to make certain that the knot (W) is held by the projection (U) on the inside of the pulley end cover, otherwise the motor leads will be in the way of the fan (Z) on the pulley end of the armature shaft. Insert and tighten the two through screws (C, Figs. 20 and 22) alternately and a little at a time, and make sure that the end covers (Q) and (N2) are solidly and accurately seated on the field core (C2) to insure perfect alignment of the armature shaft bearings (S) and (L2). Otherwise the armature will not rotate freely. Turn the shaft with the fingers to ascertain that it revolves freely.

After the end covers (Q) and (N2) are attached, fill the grease tubes with Singer Motor Lubricant, as instructed on page 36.

Replace Brushes—Machine 201-3. When inserting the brushes (C, Fig. 25) make sure that their concave ends (B1 and B2)

Fig. 25 Brushes Ready for Replacement
(Machine 201-3)

correspond with the convex surface of the commutator, and that they are replaced in the same relative position as before removal. See "Remove Brushes" page 32. Hold the end of the brush spring and tap the brush against the commutator until contact is clearly heard. Then insert and tighten the two screw caps (Z2), being careful not to strip the threads.

Replace Pulley—Machine 201-3. Put the pulley (F, Figs. 20 and 22) on the armature shaft, with the screw hole in the pulley aligned with the screw hole (A2, Figs. 23 and 24) in the shaft. Insert screw (O, Fig. 20) and turn it all the way in.

Attach Motor, Singerlight and Three-Pin Terminal to Machine 201-3

Attach the motor to the motor bracket (F3, Fig. 22) so that the lower screw hole in the pulley end cover is at the lower hole (G3, Fig. 22) in the motor bracket, and insert and tighten the screw (G3, Fig. 22). Pass the motor leads (V, Fig. 23) beneath the motor bracket (F3, Fig. 22) and attach the motor lead without identification tubing to pin No. 2, and the lead with the red identification tubing to pin No. 3 of the three-pin terminal.

Fasten the Singerlight bracket, with Singerlight, to the machine arm by means of screw (A3, Fig. 22), and pass the Singerlight leads (B3, Fig. 22) down between the pulley end of the motor and the balance wheel end of the machine, and beneath the motor bracket (F3, Fig. 22). Fasten the lead with the yellow identification tubing to pin No. 1, and the lead with the red identification tubing to pin No. 3 of the three-pin terminal. Each of the three pins of the three-pin terminal (H, Fig. 22) is provided with a washer. Make sure that these washers are placed above the wire or wires, then firmly tighten the thumb nuts (R, Fig. 20).

Attach the three-pin terminal (H, Fig. 22) to its seat on the motor bracket (F3, Fig. 22) by means of the screw (A4, Fig. 22).

Adjust Belt Tension—Machine 201-3. Loosen screw (K3, Fig. 22), which fastens the motor bracket (F3, Fig. 22) to the sewing machine, sufficiently to permit the placing of the belt in its groove on the balance wheel of the machine and on the motor pulley. With the belt in place on the balance wheel and motor pulley, move the motor bracket (F3, Fig. 22), with motor attached, up or down on its seat on the machine until correct belt tension is obtained, then firmly tighten screw (K3, Fig. 22). Tension should be just sufficient to drive the sewing machine without belt slippage.

To Lubricate the Motor—Machine 201-3. Insert the tip of the motor lubricant tube in the hole in the grease tubes (D and D2, Figs. 20 and 22) and squeeze in a quantity of lubricant sufficient to fill the grease tubes.

Never, under any circumstances, use oil in the grease cups or on any part of the motor.

Grease will remain in the bearings whereas oil works its way onto the commutator and brushes, causing most of the troubles experienced with small motors—slow speed, failure to start, overheating, smoking, etc. These troubles may be remedied by removing the oil from the commutator, brushes and inner walls of brush tubes.

Singer Bakelite Carbon Controller
(Machines 201-2 and 201-3)

These instructions, ending with page 41, relate only to the **controller mechanism** of the treadle controller, knee controller and foot controller. The controller mechanism (the unit which is mounted on the controller base and which is enclosed by the controller cover) is the same for all of the controllers herein mentioned.

Note. The controller with Cabinet 48, is readily used for knee or foot operation. (See pages 9 and 10).

The Singer Carbon Controller affords complete control of the motor in starting, operation at various speeds and stopping when desired. Should it fail to satisfactorily perform any of these duties, the trouble may be located by the following procedure:

1. Motor Fails to Start.

Operate the pedal of the foot controller, the lever of the knee controller or the treadle of the treadle controller to make sure that the mechanism does not bind.

To Inspect the Carbon Resistance Unit of the Controllers

Treadle Controller. Remove the controller from the stand to which it is attached, and remove the controller leads from the cabinet. Remove the two screws which fasten the cover, Fig. 28, to the base, Fig. 26, at (B), and lift the cover from the base. Inspect the wires and connections at (D, Fig. 26).

Convertible Foot and Knee Controller. Remove the complete controller and leads from the cabinet. Remove the four screws which fasten the cover, Fig. 29, to the base, Fig. 27, at (T2). If, after removal of these four screws, the cover adheres tightly to the base, **do not attempt to pry it off, as such procedure would mar or break the cover or base or both.**

With the four fastening screws removed, hold the controller in the left hand and, with the right hand, press the pedal (Y, Fig. 29) all the way down. This will disengage the base from the cover. Inspect the wires and connections at (D, Fig. 27).

2. Motor Fails to Operate at all Speeds.

Emergency Adjustment of Carbon Resistance Unit.

(See Fig. 26, showing the Bakelite Treadle Controller, or see Fig. 27, showing Bakelite Convertible Foot and Knee Controller.

All carbon resistance units, after mounting upon the controller mechanism, are carefully adjusted at the factory, and this adjustment cannot change unless some part of the mechanism is bent or broken.

However, if the adjustment has been disturbed, or it is found necessary to substitute a new unit, adjustment should be made as follows:

Remove the cover as instructed under "To Inspect Carbon Resistance Unit of the Controllers" on the preceding page.

(*a*). When the crank (K) is at the "off" position with its lower end resting upon the base of the spring bracket (F), the face of the Bakelite strip (S) should be $\frac{5}{16}$ inch from the flat face of the porcelain, as shown in Figs. 26 and 27. If this distance is not $\frac{5}{16}$ inch, release the insulated nut (O) from its seat by pushing on the end of the pull rod at (A) and turn the nut (O) until the correct adjustment is obtained. Be sure that the nut (O) seats in the yoke (G) and that the pin (H) of the yoke engages one of the four notches in the head of the nut (O).

Do not disturb the adjustment of the nut (R).

(*b*). Pull back the moulded link (L, Fig. 26) as far as it will go, against the tension of the springs (J), for full speed position of the **treadle controller.**

Press down the crank (K, Fig. 27) as far as it will go, for full speed position of the **convertible foot and knee controller.**

At this position, in each case, the points (Q) of the cross slide should close the two short-circuiting strips (P) and make positive contact. If this contact is too heavy, the short-circuiting strips (P) may be bent or broken.

Note. Positive contact between the points (Q) and the strips (P) is indicated by the latter being bent backward not in excess of $\frac{1}{32}$ inch with the controller in full speed position.

(*c*). If the short-circuiting strips (P) 193384 are found to be broken, they may be replaced after removing the screws (E). Adjust as instructed under (*b*).

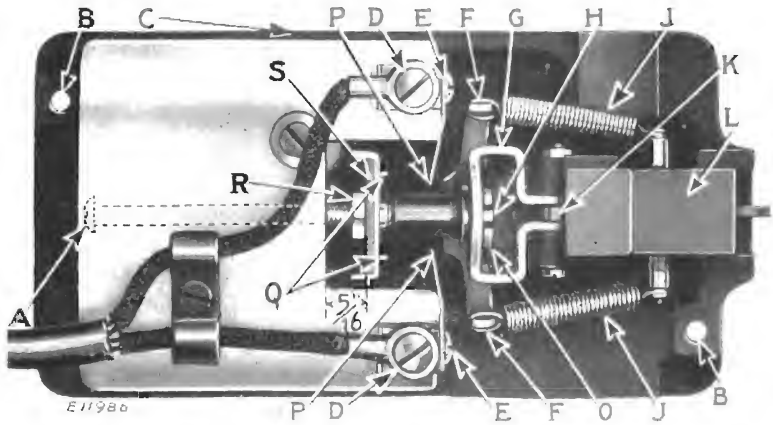

FIG. 26. BAKELITE TREADLE CONTROLLER—COVER REMOVED

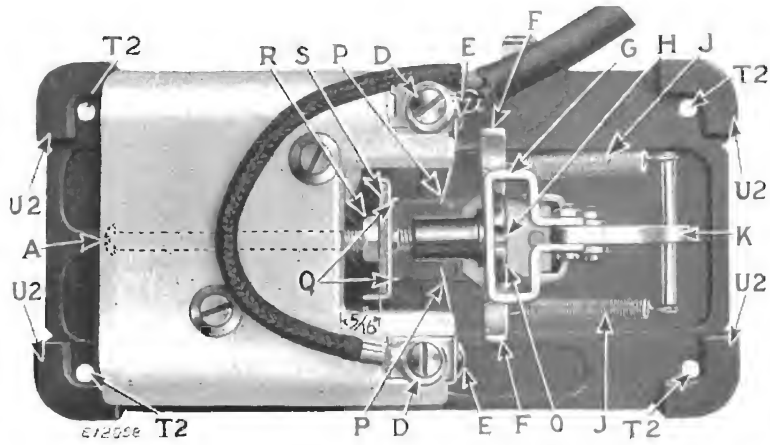

FIG. 27. BAKELITE CONVERTIBLE FOOT AND KNEE CONTROLLER COVER REMOVED

3. Motor Fails to Stop.

See that the bell crank (K) is at the "off" position with its lower end resting upon the base of the spring bracket (F). There are two notches on each of the two spring bracket posts (F). The upper notches are for the loops of the springs (J) used in the

treadle controller, Fig. 26, while the lower notches are for the loops of the springs (J) used in the convertible foot and knee controller, Fig. 27. Make sure that these springs (J) are properly attached, as shown in Figs. 26 and 27.

See that the insulated nut (O) is properly seated in the yoke (G). Check the controller adjustment as explained under part 2.

Replace the Cover—Treadle Controller. (See Fig. 28). Pass the controller leads through the opening (T) in the cover;

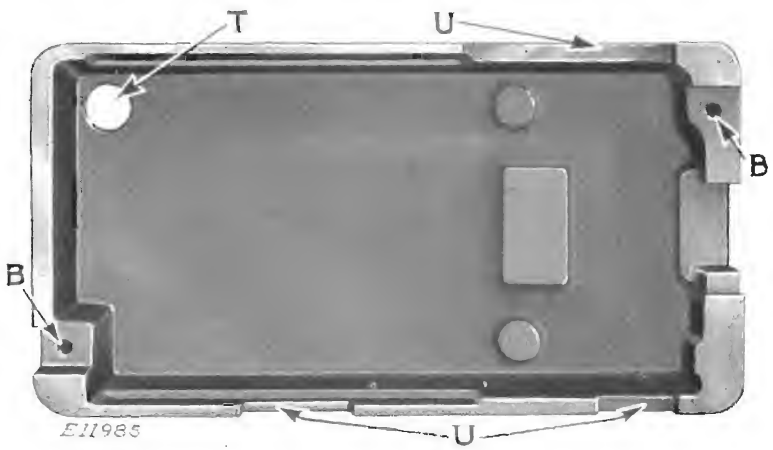

Fig. 28. Inside View of Bakelite Treadle Controller Cover

set the cover in place on the controller base, making certain that the locating pads (raised portions on the upper edges of the base) are in the corresponding cut-outs (U) in the cover.

CAUTION. When inserting the two self-threading fastening screws at (B, Figs. 26 and 28), feel carefully with the screws to **insure that the threads on these screws coincide with the threads previously cut in the cover by the original insertion of these screws.**

Replace the Cover—Convertible Foot and Knee Controller. (**See Fig. 29.**) Probably the pedal (Y) became separated from the cover as the latter was removed from the controller base. Note that its replacement in the cover is not possible except in the correct manner, viz: Insert from the inside of the cover and with one of the two long projections (Z) against the metal guide (W).

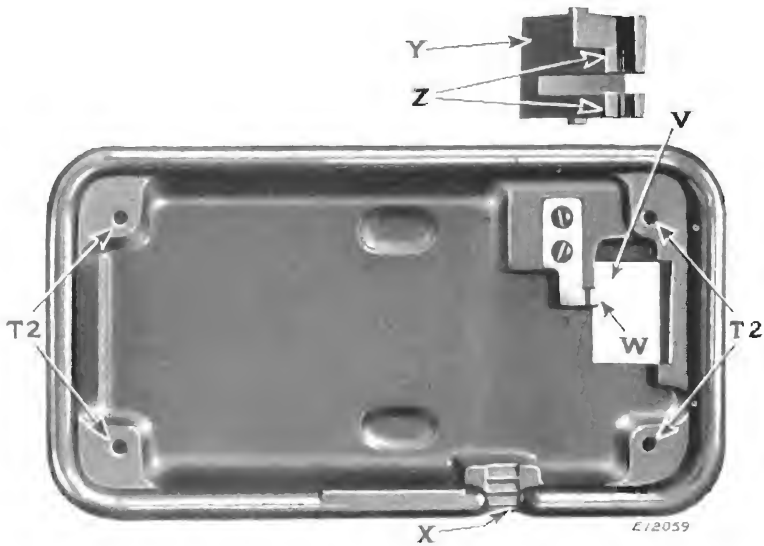

Fig. 29. Inside View of Cover of Bakelite Convertible Foot and Knee Controller Showing Pedal Disengaged from Cover

Apply a very small quantity of Singer Motor Lubricant to the pedal (Y) at such points on its four sides which come in sliding contact with the edges of the opening (V) in the cover, especially to the side which rubs or slides against the front end of the controller cover.

See that the rubber pads (U2, Fig. 27) are firmly in place on each corner of the base, as shown in Fig. 27.

Pass the controller leads through the cut-out (X) in the cover side, while placing the cover on the base, then insert the four screws through the holes (T2) in the base and into the holes (T2) in the cover. Make sure that the threads on these screws do not cross the threads in the cover. See **"CAUTION"** on preceding page.

The Following Instructions Ending with Page 68 Apply Equally to Machines 201-1, 201-2, 201-3 and 201-4 and 1200-1

To Remove and Replace the Rotating Hook Bobbin Case

To remove the rotating hook bobbin case it is not necessary to remove the throat plate, although for purposes of illustration, throat plate and feed dog are shown broken away in Fig. 30.

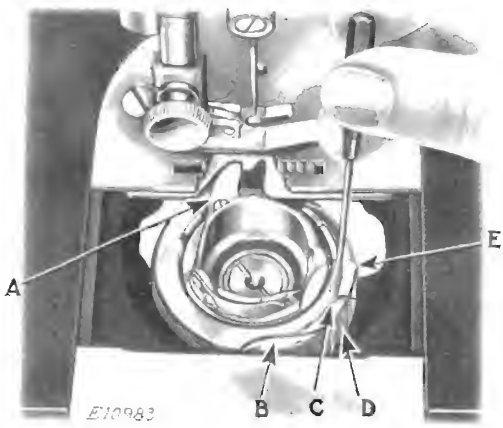

Fig. 30. Bobbin Case in Position (Throat Plate Broken Away to Show Correct Location of Finger A)

Remove rotating hook bobbin from bobbin case. Rotate balance wheel until end of rotating hook bobbin case retaining ring (E) is toward front of machine as shown in Fig. 30. Insert the blade of a small screw-driver into slot (C) between the ring and edge of the rotating hook bobbin case retaining ring spring as shown in Fig. 30. With a downward pressure turn the screw driver one half turn to the right so that the screw driver will drop into the slot and unlock the spring. While holding balance wheel to prevent its turning, place screw driver against edge of slot in the ring and push it around in a direction opposite to hook rotation until circular cut-out (B) is opposite spring (D). Then lift out ring and bobbin case.

Before replacing, remove all lint or dirt which may have collected in bobbin case and rotating hook.

To replace, first put bobbin case in position with rotating hook bobbin case finger (A) in the opening or notch in rotating hook bobbin case position plate under the feed dog as shown in Fig. 30. Turn bobbin case back and forth slightly to make sure it is properly seated, then place hook ring (E) in position with cut-out (B) opposite spring (D). Press the ring into place and turn it in the direction of hook rotation until the spring locks it in position. Replace bobbin.

To Remove and Replace the Feed Dog

Move the slide plate to the left, then take out the two throat plate screws and remove throat plate. Remove the two feed dog screws (C7, Fig. 31) and lift off feed dog (B7). When replacing feed dog, insert and tighten feed dog screws (C7).

To Remove and Replace the Rotating Hook Bobbin Case Position Plate

Move the slide plate to the left and remove throat plate. Remove feed dog as instructed at bottom of preceding page. Remove rotating hook bobbin case position plate screws (A7, Fig. 31) and rotating hook bobbin case position plate (D7). When replacing, make sure that the position plate (D7) is placed to obtain full thread space between rear side (the side farthest from the operator) of rotating hook bobbin case finger (A, Fig. 30) and the adjacent side of the notch or opening in position plate. While tightening screws (A7) apply pressure to the plate (D7) in a backward direction (away from the operator); also to the right, thus insuring that, when screws (A7) are fully tightened, full thread space is provided.

To Remove and Replace the Rotating Hook

Move the slide plate to the left and remove throat plate. Remove rotating hook bobbin case as instructed on page 42. Remove rotating hook screw (E7, Fig. 31), uncovering rotating hook position pin (X7, Fig. 31A) at upper end of rotating hook shaft.

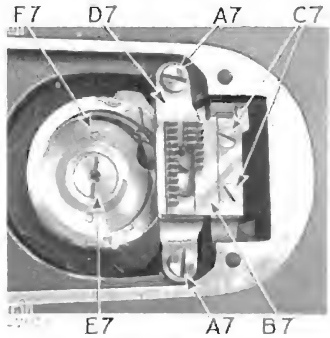

Fig. 31. To Remove Rotating Hook

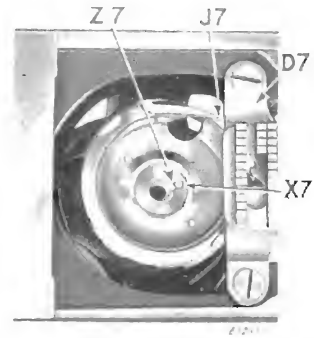

Fig. 31A. To Remove Rotating Hook

Rotate balance wheel to bring feed dog to its highest position, and to bring rotating hook point (J7) within $\frac{1}{16}$ inch from rotating hook bobbin case position plate (D7), as shown in Fig. 31A. The pin (X7) will then be in the position shown in Fig. 31A, and the rotating hook can easily be removed. While the removal of the throat plate is not necessary, it is suggested as a convenience when replacing rotating hook bobbin case finger (A, Fig. 30) in its notch in position plate.

To replace, reverse removal operations, keeping pin (X7) in the position shown in Fig. 31A, and making sure that slot (Z7, Figs. 31A and 37), in rotating hook, is in engagement with pin (X7); also that finger (A, Fig. 30) is in its opening or notch in position plate as shown in Fig. 30. Insert and tighten screw (E7) and replace bobbin case as instructed on the preceding page; also replace throat plate.

To Time the Rotating Hook

Move the slide plate to the left. Remove face plate, throat plate and bobbin; also remove the feed dog as instructed on page 42.

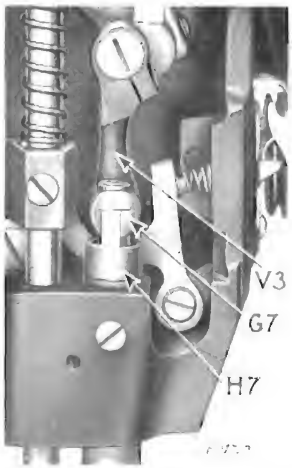

Fig. 32. Correct Adjustment of Timing Gauge

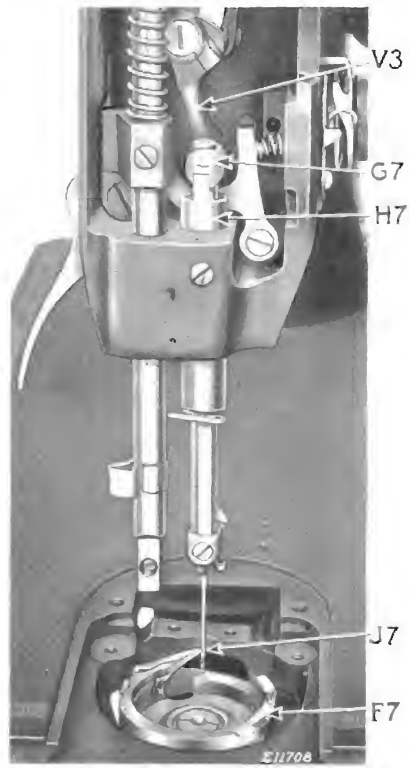

Fig. 33. Needle Bar and Rotating Hook Correctly Timed

For purposes of illustration, Fig. 33 also shows rotating hook bobbin case position plate and rotating hook bobbin case removed; the removal of these parts is, however, not essential to the timing operation. In fact, it is important that the position plate be left in the machine unless the bobbin case also is removed. Were the position plate removed and the bobbin case left in the machine, the rotation of the balance wheel might move rotating hook bobbin case finger (A, Fig. 30) to where the needle could strike it, thus damaging the needle.

Note the two timing marks on needle bar connecting stud (G7).

Turn the balance wheel to bring the needle bar connecting stud (G7) to its **lowest** position. At this position of stud (G7) the **upper** of the two timing marks should be exactly even with the top of the finger of the needle bar timing gauge (H7, Fig. 32). In some cases it may be necessary to raise or lower the timing gauge (H7) to bring the top of its finger in line with the upper mark on the stud (G7) when the stud is at its lowest position as shown in Fig. 32.

Then turn the balance wheel toward you until the **lower** timing mark on the stud (G7) is exactly even with the top of the finger of the gauge (H7) when the needle bar has started on its upward stroke. With the stud (G7) in this position, the point of the rotating hook must be at the centre of the needle as shown at (J7, Fig. 33) if the rotating hook (F7) is correctly timed.

Should retiming be found necessary, lay the machine on its rear side and remove rotatting hook shaft bevel gear cover (N7, Fig. 34) at the front (left hand) end of rotating hook driving shaft (K7), by taking out the two rotating hook shaft bevel gear cover screws (M7). Loosen the two screws (P7, Fig. 35) in the hub of rotating hook driving shaft front bevel gear (T7) so that gear (T7) can be turned on the shaft (K7). Turn gear (T7) until point of rotating hook is at center of needle as shown at (J7, Fig. 33) when the needle bar has started on its upward stroke. With the hook point in the position shown at (J7, Fig. 33), tighten the two rotating hook driving shaft bevel gear front set screws (P7), making sure that hub of gear (T7) is against the left hand end of rotating hook driving shaft front bushing (O7) to prevent unnecessary end play. If hub of gear (T7) is placed too tightly against bushing (O7), the shaft (K7) will not turn freely. Replace gear cover (N7) and insert and tighten the screws (M7). Replace bobbin, feed dog, throat plate and face plate.

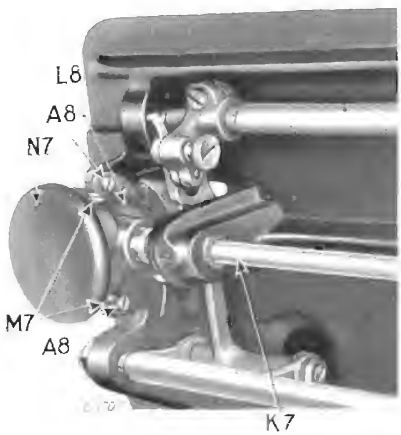

Fig. 34. Removing Rotating Hook Shaft Bevel Gear Cover

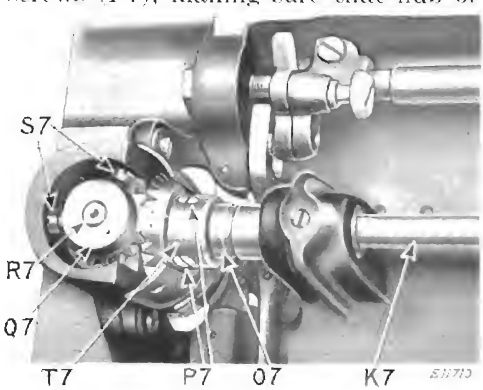

Fig. 35. Setting Rotating Hook Driving Shaft Front Bevel Gear to Time Rotating Hook

To Set the Needle Bar at the Correct Height

Make sure that the needle is inserted as far as it will go in the needle bar; also that the needle bar timing gauge (H7, Fig. 32) is set at the correct height as evidenced by the top of the finger of the timing gauge (H7) being exactly even with the upper mark on the needle bar connecting stud (G7, Fig. 32) when this stud is at its lowest position as instructed and illustrated on page 44.

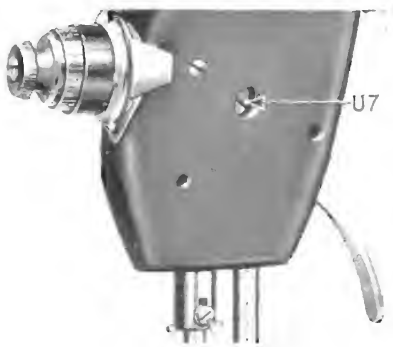

Fig. 36. Screw to Adjust Needle Bar Height

Turn the balance wheel toward you to bring the **lower** timing mark on the connecting stud (G7, Fig. 33) exactly even with the top of the finger of the timing gauge (H7) immediately after the needle bar has commenced its upward stroke. With the needle bar connecting stud (G7) in this position, the top of the eye of the needle should be about $\frac{1}{16}$ inch below the point of the rotating hook, as shown by (J7, Fig. 33).

If this adjustment has been disturbed, turn the balance wheel to bring the needle bar connecting stud (G7) to its lowest position. In this position of the stud (G7), the needle bar connecting stud set screw (U7, Fig. 36) is accessible through the hole at (U7). The screw (U7) connects the stud (G7) in the lower bearing of the connecting link (V3, Figs. 32 and 33) to the upper end of the needle bar. Loosen the screw (U7) and move the needle bar to correct height in accordance with these instructions, then tighten screw (U7).

To Remove and Replace the Rotating Hook Shaft and Rotating Hook Shaft Bevel Gear

Note. Before removing any gears, mark them to insure their replacement with the same teeth in mesh as before removal.

Remove face plate. Move the slide plate to the left and remove the throat plate. Remove rotating hook bobbin case as instructed on page 42, and remove rotating hook as instructed on page 43. Lay the machine on its rear side and remove the rotating hook shaft bevel gear cover (N7, Fig. 34) as instructed on page 45. Loosen the two rotating hook shaft bevel gear set screws (S7, Figs. 35 and 37) and withdraw the rotating hook shaft bevel gear (Q7, Figs. 35 and 37) from the rotating hook shaft (R7, Figs. 35 and 37).

The rotating hook shaft (R7) can now be withdrawn from the top of the machine bed.

When replacing, insert the rotating hook shaft (R7) into its bushing through the top of the machine bed, and so that the flange (Y7) rests upon the upper end of the rotating hook shaft flanged bushing. To the lower end of the shaft (R7) attach the rotating hook shaft bevel gear (Q7) with the top of the gear hub snugly against the lower end of the rotating hook shaft flanged bushing to prevent end play, then tighten the two set screws (S7), making sure that one of these two screws is tightened against the "flat" (W7) on the lower end of shaft (R7).

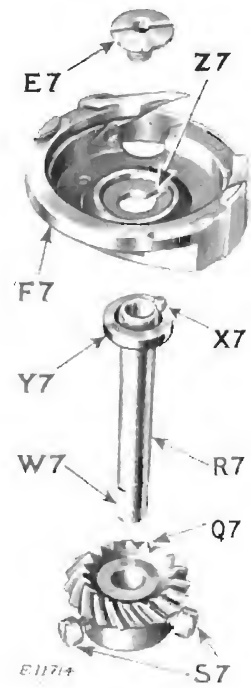

FIG. 37. ROTATING HOOK SHAFT AND GEAR (REMOVED AND DISASSEMBLED)

Time the rotating hook (F7), as instructed on pages 44 and 45, to bring the point of the hook at the center of the needle when the top of the finger of the needle bar timing gauge (H7, Fig. 33) is exactly even with the lower timing mark on the needle bar connecting stud (G7, Fig. 33), immediately after the needle bar has commenced its upward stroke.

Replace the gear cover (N7, Fig. 34) and insert and tighten the two rotating hook shaft bevel gear cover screws (M7, Fig. 34). Replace the rotating hook (F7) as instructed on page 43, and replace the rotating hook bobbin case as instructed on page 42. Replace the throat plate and the face plate.

To Remove and Replace Rotating Hook Driving Shaft and Rotating Hook Driving Shaft Bevel Gears

Note. Before removing any gears, mark them to insure their replacement with the same teeth in mesh as before removal.

Remove the rotating hook shaft bevel gear cover (N7, Fig. 34) as instructed on page 45, then take out the two screws (B8, Fig. 38) to remove the rotating hook driving shaft bevel gear back cover (C8, Fig. 38). Loosen the two screws (P7, Fig. 35) in the rotating

hook driving shaft front bevel gear (T7, Fig. 35); also loosen the two screws (E8, Fig. 39) in the rotating hook driving shaft collar (K8, Fig. 39), and loosen the two screws (J8) in the hub of the rotating hook driving shaft back bevel gear (G8), then withdraw the rotating hook driving shaft (K7) from the rotating hook driving shaft front bevel gear (T7, Fig. 35); from the rotating hook driving shaft front bushing (O7, Fig. 35); from the rotating hook driving shaft collar (K8); from the rotating hook driving shaft back bushing (F8) and from the rotating hook driving shaft back bevel gear (G8), and out from the rear (right hand) end of the machine.

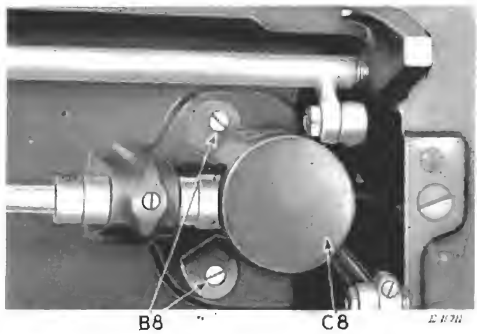

Fig. 38. Removing Rotating Hook Driving Shaft Bevel Gear Back Cover

The withdrawal of the shaft (K7) from the machine results in the immediate displacement of the back gear (G8) and collar

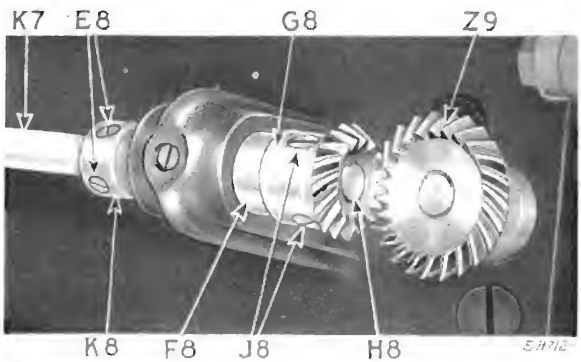

Fig. 39. To Remove Rotating Hook Driving Shaft and Rotating Hook Driving Shaft Back Bevel Gear

(K8), but the front gear (T7, Fig. 35) remains in place, being held in part by the rotating hook shaft bevel gear (Q7, Figs. 35 and 37)

and by the rotating hook driving shaft bevel gear front cover (L8, Fig. 34). After the withdrawal of the shaft (K7, Fig. 39), to disengage the rotating hook driving shaft front bevel gear (T7, Fig. 35) from the rotating hook shaft bevel gear (Q7, Figs. 35 and 37), take out the two screws (A8, Fig. 34) and remove the rotating hook driving shaft bevel gear front cover (L8, Fig. 34). The gear (T7, Fig. 35) can then be completely removed.

When replacing the shaft (K7), hold the back gear (G8, Fig. 39) against the rotating hook driving shaft back bushing (F8, Fig. 39) and in mesh with the upright arm shaft lower bevel gear (Z9, Fig. 39). The shaft (K7) is provided with a "flat" at its right hand end so that one of the two screws (J8, Fig. 39) in the back gear (G8) can be tightened against it. With the "flat" end of the shaft at the right, insert this shaft (K7) through the back gear (G8, Fig. 39), the back bushing (F8, Fig. 39), the collar (K8, Fig. 39) and the front bushing (O7, Fig. 35). Hold the driving shaft front bevel gear (T7, Fig. 35) in mesh with the hook shaft bevel gear (Q7, Figs. 35 and 37) and complete the insertion of the rotating hook driving shaft (K7) through the front gear (T7, Fig. 35) until the rear (right hand) end of the shaft is about flush with the right hand end of the back gear (G8, Fig. 39), as indicated by (H8, Fig. 39). Tighten the two screws (J8, Fig. 39), making sure that one of these two screws is tightened against the "flat" on the right hand end of shaft (K7). Then, with the hub of the back gear (G8, Fig. 39) against the back bushing (F8, Fig. 39), have the collar (K8, Fig. 39) against the left hand end of the bushing (F8) as shown in Fig. 39, then tighten the two screws (E8) in the collar (K8).

Replace the back gear cover (C8, Fig. 38) and insert and tighten the two screws (B8, Fig. 38).

Note. Do not press the gear (G8, Fig. 39) and the collar (K8) too tightly against the bushing (F8) when tightening the screws (J8) in the back gear, and the screws (E8) in the collar, as this will retard the free rotation of the shaft (K7).

Time the rotating hook (F7, Figs. 33 and 37) as instructed on pages 44 and 45, and tighten the two rotating hook driving shaft front bevel gear set screws (P7, Fig. 35) making certain to have the hub of this front gear (T7, Fig. 35) against the front bushing (O7, Fig. 35); but do not set this gear too tightly against the bushing when tightening the screws (P7).

Replace the rotating hook driving shaft bevel gear front cover (L8, Fig. 34) and insert and tighten the two screws (A8, Fig. 34). Replace rotating hook shaft bevel gear cover (N7, Fig. 34) and insert and tighten the two screws (M7, Fig. 34).

To Raise or Lower the Feed Dog

The feed dog should be so adjusted that when it reaches its highest position, slightly less than the full depth of the feed dog teeth will project through the slots in the throat plate. The top of the feed dog teeth should be not more than $\frac{3}{64}$ inch above top surface of throat plate when feed dog reaches its highest position.

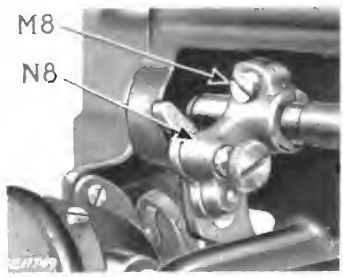

FIG. 40. TO RAISE OR LOWER THE FEED DOG

To raise or lower feed dog, turn balance wheel to bring feed dog to its highest position; lay machine on its rear side and loosen feed lifting rock shaft crank clamping screw (M8, Fig. 40), then turn feed lifting rock shaft crank (N8, Fig. 40) up or down on the shaft until feed dog is at required height, viz: with the top of the feed dog teeth not more than $\frac{3}{64}$ inch above top surface of throat plate. Tighten clamping screw (M8).

To Adjust the Position of the Feed Dog Lengthwise In the Feed Dog Slots in the Throat Plate

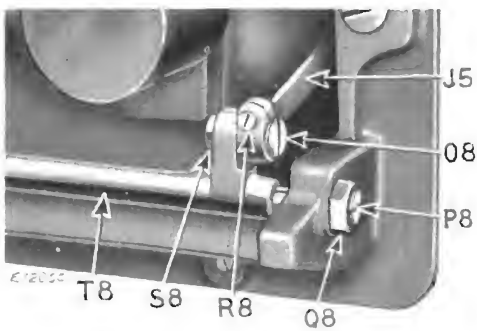

FIG. 41. LENGTHWISE ADJUSTMENT OF FEED DOG

The feed dog should be adjusted to clear the ends of the slots in throat plate by an equal distance at each end of its movement, in both forward and reverse stitching.

Should adjustment be necessary, loosen feed forked connection eccentric hinge screw nut (S8) and turn feed forked connection eccentric hinge screw (O8) until its high throw is toward top of machine and in the direction of feed forked connection (J5). Tighten nut (S8).

Note. The purpose of the feed forked connection adjusting screw (R8) is to take up wear which might occur after long periods of use, or as the result of neglect of proper lubrication.

To Adjust the Position of Feed Dog Centrally with Relation to the Sides of Throat Plate Slots

The feed dog teeth should be equi-distant from the sides of the slots in the throat plate.

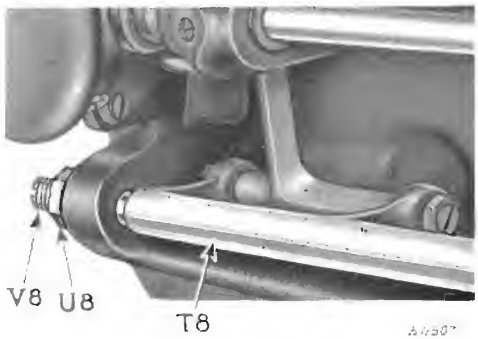

Fig. 42. Sidewise Adjustment of Feed Dog

Should adjustment be necessary, loosen feed rock shaft screw center nut (U8, Fig. 42) at the front (left hand) end of the feed rock shaft (T8); also loosen the feed rock shaft screw center nut (Q8, Fig. 41) at the rear (right hand) end of the feed rock shaft (T8). Turn the front feed rock shaft screw center (V8) counter-clockwise, and turn the rear feed rock shaft screw center (P8, Fig. 41) clockwise to move the feed dog to the left; or turn the rear screw center (P8, Fig. 41) counter-clockwise and turn the front screw center (V8) clockwise to move the feed dog to the right.

The adjustment of the screw centers (V8) and (P8) is a very exacting one, and it is advisable to disconnect the feed forked connection (J5, Fig. 41) at the feed rock shaft (T8) in order to accurately adjust these screw centers to eliminate perceptible end play of the feed rock shaft (T8). The screw centers (V8) and (P8) must be set closely to bring the feed dog teeth to the center of the slots in the throat plate, after which they should be backed off alternately and very slightly so that the centrally set position of the feed dog will not be affected by the adjustment for free rocking movement of the feed rock shaft (T8).

When correct adjustment is completed, tighten the screw center nuts (U8, Fig. 42) and (Q8, Fig. 41) while holding each screw center with a screw driver to insure that the adjustment of these screw centers will not change during the tightening of these nuts.

To Remove and Disassemble the Graduated Tension

Loosen the tension stud set screw (A, Fig. 43) and withdraw the complete tension assembly from the machine.

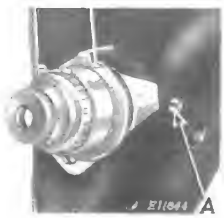

Fig. 43

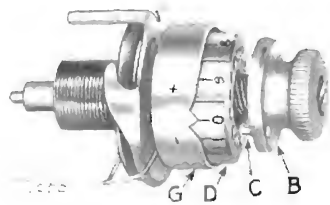

Fig. 44

Turn the tension regulating thumb nut (B, Fig. 44) until zero on the tension index flange (D) is opposite the pointer on the tension indicator (G); then press in the index flange (D) to disengage the pin (C) in the thumb nut (B) from the flange, and remove the thumb nut and flange, the flange stop motion washer (E, Fig. 45), tension spring (F), indicator (G), tension releasing pin (J) and tension disc assembly (H) which includes the thread take-up spring, thread take-up spring thread guard and two discs.

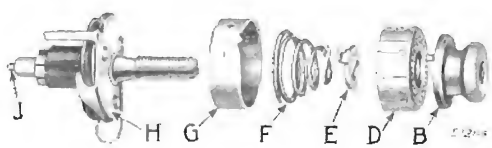

Fig. 45

To Reassemble and Replace the Graduated Tension

Place the two tension discs (L, Fig. 46) with their convex sides facing each other in position on the thread take-up spring thread guard (M). Then pass the eyelet (N) of the thread take-up spring under the thread guard (M), having the coils of the spring above the tension discs as shown in Fig. 46.

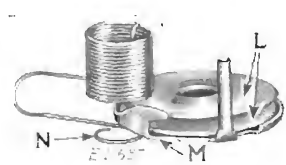

Fig. 46

Pass the threaded end (O, Fig. 47) of the tension stud through the coils of the take-up spring (P), through the holes in the two tension discs (L) and thread guard (M), and through the eyelet (N, Fig. 46) of the take-up spring, having the end of the take-up spring enter one of the grooves (Q) in the stud. Then place the tension releasing pin (J) in the tension stud.

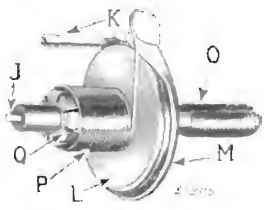

Fig. 47

Hold the parts thus assembled against the shoulder on the stud and place the tension indicator (G, Fig. 48) on the stud, then insert the tension spring (F) in the indicator with the first half-turn of the spring below the stud or away from the pointer of the indicator, as shown in Fig. 48. Now place the index flange stop washer (E) on the stud with its extension toward the indicator pointer, as in Fig. 48. If spring and stop washer are in correct position, the extension (S) will clear the first coil of the spring as shown in Fig. 49.

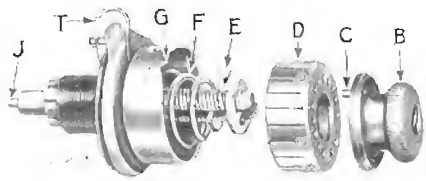

Fig. 48

Place the tension index flange (D, Fig. 48) on the stud; turn it so that the number 1 is opposite the pointer on the tension indicator (G), and press it inward until the tension regulating thumb nut (B) can be turned onto the stud. Insert the pin (C) in different holes in the flange until one is found which permits the full range of tension from light to heavy to be produced with one revolution of the thumb nut.

Fig. 49

Lower the presser bar to relieve the pressure on the tension releasing pin (J, Fig. 48). Replace the complete tension assembly in the machine, having the long lug (K, Fig. 47) enter the hole (U, Fig. 50), the pointer (G, Fig. 48) at the top, and the thread take-up spring resting on the slack thread regulator at (V, Fig. 50). Push the complete tension in as far as it will go, then firmly tighten set screw (A).

The tension of the thread take-up spring (T, Fig. 48) should be just sufficient to take up the slack of the needle thread until the eye of the needle reaches the goods in its descent. A slight variation in the tension on the take-up spring may be secured by loosening the tension stud set screw (A, Fig. 50) and turning the tension stud, with the indicator (G, Fig. 48), to the left for more tension or to the right for less tension. However, if the correct tension cannot be secured without turning the indicator pointer (G) to a position inconvenient to read, remove the assembly from the machine, disengage the end of the thread take-up spring from the groove (Q, Fig. 47) in the tension stud, revolve the spring and place its end in the groove which produces the correct tension.

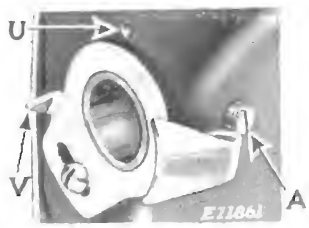

FIG. 50

Ordinarily, the tension on the needle thread is regulated by turning the thumb nut (B, Fig. 48), but if the required tension cannot be produced by this means, adjust the tension as follows:

Press in the tension index flange (D, Fig. 48) to disengage the pin (C) in the thumb nut (B) from the flange, then reset the pin in one of the other regulating holes in the flange, turning the thumb nut inwardly to increase the tension or outwardly to decrease it.

To Adjust the Bobbin Winder

If the pressure of the bobbin winder pulley, against the hub of the balance wheel, is insufficient for winding the bobbin, press down the bobbin winder until the bobbin winder stop latch (A) drops down and holds it, then loosen the bobbin winder tension bracket screw (F). With the forefinger, push back the upper end of the bobbin winder tripping arm (E) as far as it will go, as shown in Fig. 51 and, at the same time, press the bobbin winder pulley against the hub of the balance wheel, then tighten the bracket screw (F).

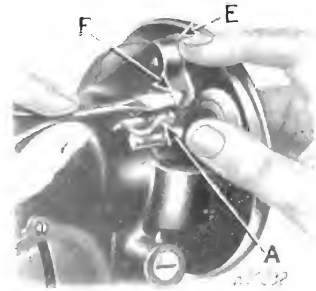

FIG. 51. ADJUSTMENT OF BOBBIN WINDER

If the thread does not wind evenly on the bobbin, loosen the screw which holds the bobbin winder tension bracket on the bed of the machine and slide the tension bracket to the right or to the left as may be required, then tighten the screw.

To Adjust the Presser Bar

With the presser bar lifter raised, there should be a clearance of not more than $\frac{19}{64}$ inch between presser foot and the top surface of the throat plate. The presser foot should be parallel with the feed dog, this position being readily observable with the presser foot lowered. The needle should be close to (but not touch) the inner or right hand side of the large toe of the presser foot.

To adjust, remove face plate and raise presser bar lifter; loosen presser bar guide bracket set screw (Z8, Fig. 52) and raise or lower presser bar to correct height. Have presser foot parallel with feed dog, and have the needle close to the inner, or right hand, side of the big toe of presser foot. Securely tighten set screw (Z8, Fig. 52) and replace face plate.

To Remove and Replace the Presser Bar

Remove face plate, presser foot, presser foot thumb screw and thread cutter and holder (Y8, Fig. 52). Loosen screw (Z8, Fig. 52) in presser bar guide bracket (A9, Fig. 52). Remove pressure regulating thumb screw (F9, Fig. 52). Remove presser bar through top of machine arm, thus also removing presser bar spring (D9, Fig. 52) and presser bar spring washer (E9, Fig. 52) and releasing bracket (A9, Fig. 52). There should be no necessity for removing bracket (A9) from its slot (C9) in the machine arm. However, should its removal be desired, rotate balance wheel to bring needle bar to its lowest position and withdraw bracket (A9) from slot (C9).

When replacing, place presser bar spring (D9) on the presser bar, and put presser bar spring washer (E9) on the presser bar, so that this washer rests upon the upper end of spring (D9), then insert the presser bar, with spring (D9) and washer (E9) in place thereon, downward through top of machine and through presser bar guide bracket (A9).

Note. If the sliding fit of bracket (A9) in slot (C9) is too loose, turn presser bar guide bracket adjusting screw (B9) inwardly, or turn this screw outwardly if the fit is too tight. The bracket should occupy the slot without unnecessary side play, but at the same time so that it will slide freely in the slot when presser bar lifter is raised or lowered.

Insert and turn down pressure regulating thumb screw (F9) and, in case the oiling wick in this thumb screw has become displaced, be sure to replace it.

Set presser bar for correct height as instructed at the top of this page.

When turning down thumb screw (F9), bear in mind that pressure should not be in excess of that required for positive feeding of the material. Replace face plate, thread cutter and holder (Y8), presser foot and presser foot thumb screw.

To Remove and Replace the Needle Bar

Remove the face plate and the needle. Unscrew needle clamp thumb screw (X8, Figs. 52 and 52A); also remove needle clamp position screw (K12, Figs. 52 and 52A) and take the clamp (B12, Figs. 52 and 52A) off the presser bar.

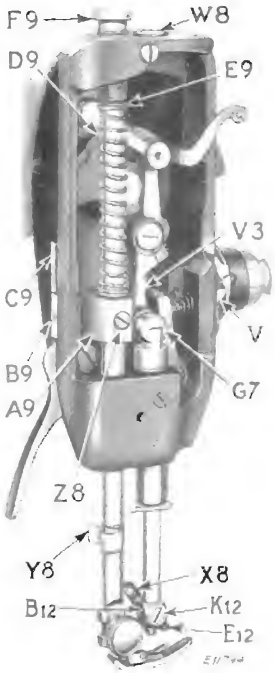

Fig. 52. To Remove Needle Bar and Presser Bar

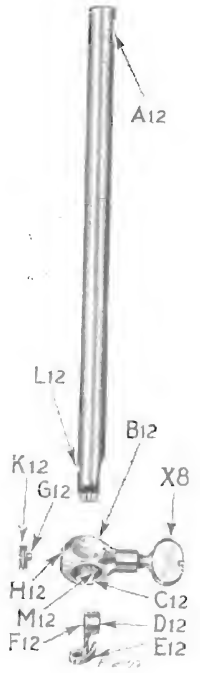

Fig. 52A. Needle Bar Removed and Disassembled

Turn the balance wheel to bring the needle bar connecting stud (G7, Fig. 52) to its lowest position, so that the needle bar connecting stud set screw (U7, Fig. 36) —which connects the stud (G7) in the lower bearing of the connecting link (V3) to the upper end of the needle bar—is accessible through the hole at (U7, Fig. 36). With the needle bar down, drive the needle bar plug (W8) from the bottom up and out through the top of the machine. Loosen the needle bar connecting stud set screw (U7, Fig. 36) and push the needle bar up and out through the top of the machine.

When replacing, insert the needle bar downward through the top of the machine, and set the needle bar for correct height as instructed on page 46, making sure that the set screw (U7, Fig. 36) is tightened against the "flat" (A12) at the upper end of the needle bar.

When the needle clamp (B12) was withdrawn from the needle bar, probably the needle clamp gib and thread guard (F12, Fig. 52A) became separated from the clamp body (B12). In such case, insert the gib and thread guard (F12) into the clamp body through the needle bar opening (C12) at the under side of the clamp body, and place the projection or hub (D12) of the gib in the opening (M12) for the same on the inside of the clamp body, where the needle clamp thumb screw (X8) will be tightened against the hub (D12), thus bringing the thread guard portion (E12) of the gib down at the under side of the clamp and toward the operator. Fig. 52 shows the tip of the thread guard projecting from the under side of the clamp and will serve to illustrate the proper positions of all of the needle clamp parts when assembled on the needle bar.

Place the needle clamp (B12), with the needle clamp gib and thread guard in place therein, on the needle bar. Insert the needle clamp position screw (K12) into the clamp at (H12) while locating the clamp (B12) on the needle bar, so that when the position screw (K12) is tightened, its tip (G12) will enter the hole (L12) in the lower end of the needle bar. Tighten position screw (K12). Insert the needle as far as it will go up into the needle bar and tighten needle clamp thumb screw (X8).

Set the needle bar for correct height as instructed on page 46, and replace the needle bar plug (W8), the face plate and the face plate thumb screw.

To Remove and Replace the Feed Connecting Rod

Remove the balance wheel (Machine 201-2) as instructed on page 26. The removal of the balance wheel is recommended because, when the feed connecting rod cap is replaced, it is necessary to determine accurately that the cap does not bind the horizontal arm shaft and, at the same time, that there is no play in this bearing. This is determined by rotating the horizontal arm shaft by hand, and any slight discrepancy in the fit of this bearing would not be so easily perceived with the motor connected to this shaft.

In the case of Machine 201-3, it is not necessary to remove the balance wheel when removing and replacing the feed connecting rod. To disconnect the motor from Machine 201-3, it is only necessary to remove the machine driving belt.

It is not necessary to remove the balance wheel when removing and replacing the feed connecting rod in Machines 201-1 and 201-4.

Turn the arm side cover up and retain it in that position by tightening the thumb screw. For the purpose of illustration, Fig.

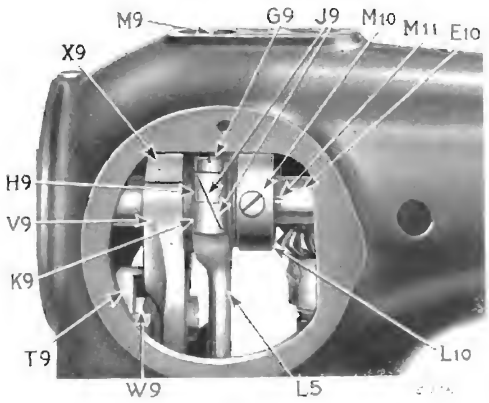

Fig. 53. To Remove Feed Connecting Rod

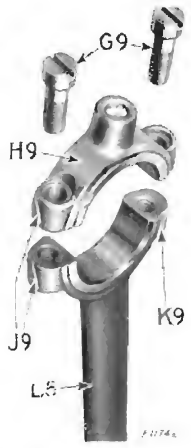

Fig. 54. Feed Connecting Rod Removed Showing Upper End

53 shows arm side cover completely removed. Remove arm top cover to gain access to opening (M9, Fig. 53). Using a screw driver through opening (M9) remove the two feed connecting rod cap screws (G9, Figs. 53 and 54). Remove feed necting rod hinge screw nut (O9, Fig. 55) and feed connecting rod hinge screw (P9, Fig. 55) and withdraw feed connecting rod (L5) from the opening in the machine bed. When replacing, note that the hole for hinge screw (P9) is a taper hole. When inserting the feed connecting rod through the opening in the machine bed, have the side of the connecting rod with the wide end of the taper hole toward the balance wheel end of

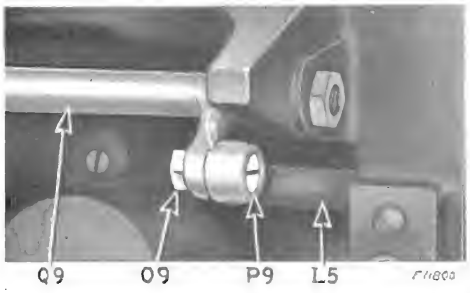

Fig. 55. To Detach Lower End of Feed Connecting Rod

the machine. Be sure to attach the feed connecting rod cap (H9, Figs. 53 and 54) in the same position as before removal. One side of the cap (H9) and the cap end (K9) of the feed connecting rod is marked, as shown by (J9) to plainly indicate the position in which the cap is to be replaced. Were it replaced in a reversed position, the feed connecting rod cap would bind the arm shaft instead of permitting it to rotate with a complete absence of "drag." If, when the cap screws (G9) are tightened, there is play in this bearing, remove the cap and, using a lapping stone or a piece of emery cloth, rub down that part of the cap which is tightened against the cap end (K9) of the connecting rod. **Do not use an emery wheel for this purpose and do not take off too much of the cap.** By hand, rotate the horizontal arm shaft to test the fit of the feed connecting rod bearing, after a slight rubbing, to make sure that when tightened to the connecting rod,the horizontal shaft rotates freely but without perceptible play. Attach the lower end of the feed connecting rod (L5, Fig. 55) to the feed lifting rock shaft (Q9, Fig. 55). If the taper hinge screw (P9) is turned in too tightly before tightening nut (O9), this bearing will bind or drag. On the other hand, there should be no unnecessary play in this bearing. When this adjustment is completed, replace arm top cover and close arm side cover. Replace balance wheel (Machine 201-2), or replace machine driving belt (Machine 201-3).

To Remove and Replace the Feed Forked Connection and the Feed Regulator

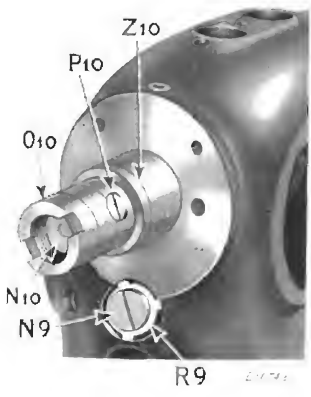

Fig. 56
To Remove Feed Regulator

Remove balance wheel from Machine 201-2 as instructed on page 26. The removal of the balance wheel from Machines 201-1, 201-3 and 201-4 is accomplished in practically the same manner as with Machine 201-2, except that there is no textolite gear, etc., to consider.

Remove the motor from Machine 201-2 as instructed on page 21. For this replacement it is not necessary to remove the motor from Machine 201-3, but its removal in this case might be recommended to insure that the motor will not sustain damage during the removal and replacement of the feed forked connection.

Turn up the arm side cover and keep it in that position by tightening the thumb screw. Remove the stitch indicator plate. Remove the feed forked connection eccentric hinge screw nut (S8, Fig. 41) and the feed forked connection eccentric hinge screw (O8, Fig. 41) thus disconnecting the feed forked connection (J5, Figs. 41 and 57) from the feed rock shaft (T8, Fig. 41). Next remove the feed regulator hinge screw (N9, Figs. 56 and 57) and the feed regulator hinge screw friction washer (R9, Figs. 56 and 57), thus detaching the feed regulator (T9, Figs. 53 and 57) from the inside of the machine arm. The feed forked connection (J5), together with feed regulator (T9), can now be withdrawn through the opening in the machine bed, or the feed regulator (T9) can be removed, first, through the stitch indicator plate opening.

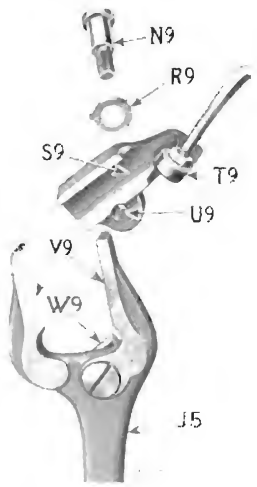

Fig. 57. Feed Forked Connection (Upper End) and Feed Regulator Removed from Machine

When replacing, first insert the feed forked connection (J5) through the opening in the machine bed, and with the feed forked connection slide block (W9) in place on its stud on the feed forked connection, while keeping the side with the slide block (W9) toward the balance wheel end of the machine. With the fork (V9, Figs. 53 and 57) in place on its cam (X9, Fig. 53), reach through the stitch indicator plate opening and turn the slide block (W9) so that it will enter the slideway (S9) on the feed regulator; then, with the feed regulator (T9) on the slide block (W9), move the feed regulator to bring the screw hole (U9) in alignment with the corresponding hole at (N9, Fig. 56) in the machine arm. Place friction washer (R9) on the hinge screw (N9), having the convex side of this washer against the head of screw (N9). Then insert hinge screw (N9) in the hole--concealed by screw (N9) in Fig. 56—and into screw hole (U9) of the feed regulator, then tighten hinge screw (N9) sufficiently to insure that feed regulator will remain in the position at which it is set. Attach the lower end of feed forked connection (J5, Fig. 41) to feed rock shaft (T8, Fig. 41) by means of eccentric screw (O8, Fig. 41) and nut (S8, Fig. 41), and adjust for lengthwise position of feed dog as instructed on page 50. Close arm side cover and replace stitch indicator plate. Replace motor as instructed on page 25 and replace balance wheel as instructed on page 26.

To Remove and Replace the Upright Arm Shaft and the Upright Arm Shaft Gears

Before removing any gears, it is advisable to mark them to insure their replacement with the same teeth in mesh as before removal. This, of course, applies only when the the old gears are reinstalled.

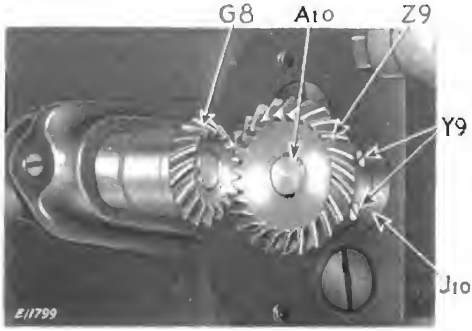

Fig. 58 To Remove Upright Arm Shaft and Gears (Showing Lower End)

Remove the rotating hook driving shaft bevel gear back cover as instructed at the bottom of page 47; also remove the arm side cover and the stitch indicator plate.

Remove the balance wheel as instructed on page 26.

Loosen the two set screws (Y9, Fig. 58) in the upright arm shaft lower bevel gear (Z9), then, through the arm side cover opening shown in Fig. 59, loosen the two set screws (B10, Fig. 59) in the upright arm shaft upper bevel gear (C10, Fig. 59). There is sufficient space at (D10, Fig. 59) between the lower side of the horizontal arm shaft (E10, Fig. 59) and the top of the upper gear (C10, Fig. 59) to reach the upper end of the upright arm shaft and tap upon, or press against, its upper end. The upright arm shaft—the lower end of which is shown at (A10) in Fig. 58—when started sufficiently to bring its lower end below the bottom surface of the lower gear (Z9, Fig. 58) can then be withdrawn from its bearings and from the two gears (C10, Fig. 59) and (Z9, Fig. 58) by grasping its projecting lower end.

When replacing, hold the lower gear (Z9, Fig. 58) in mesh with the rotating hook driving shaft back bevel gear (G8) at the rear end of the rotating hook driving shaft, then insert the upright arm shaft (A10, Fig. 58) up through the lower gear (Z9), through the upright arm shaft lower bushing (J10), through and flush with the upright arm shaft upper bushing (G10, Fig. 59). Hold the upper gear (C10, Fig. 59) in place on the upper bushing (G10, Fig. 59) and in mesh with the horizontal arm shaft bevel gear (H10, Fig. 59) at the rear end of the horizontal arm shaft (E10, Fig. 59), and complete the insertion of the upright arm shaft through the upper gear (C10) until the lower end of this shaft is approximately flush with the bottom face of the lower gear as shown at (A10, Fig. 58). Tighten the two screws (Y9),

making sure that one of them is tightened against the "flat" on the lower end of the upright arm shaft, and that the hub of the lower gear (Z9) is against lower bushing (J10); then tighten the two screws (B10, Fig. 59), making sure that one is tightened against the "flat" on the upper end of the upright arm shaft while the hub of the upper gear (C10) is resting on the upper bushing (G10).

Note. Do not press the gears too tightly against the bushings while tightening the screws (B10, Fig. 59) in the upper gear (C10), as this will retard the free rotation of the upright arm shaft (A10).

Time the rotating hook as instructed on pages 44 and 45. Replace the back gear cover as instructed on page 49. Replace balance wheel as instructed on page 26. Replace arm side cover and stitch indicator plate.

To Remove and Replace the Horizontal Arm Shaft Horizontal Arm Shaft Bushing Horizontal Arm Shaft Bevel Gear and Counterbalanced Feed Cam and Feed-Lifting Eccentric

Remove the face plate, arm side cover and stitch indicator plate. Remove the needle bar as instructed on page 56, and remove the presser bar as instructed on page 55.

Remove the balance wheel from **Machine 201-2** as instructed on page 26, and remove the motor from **Machine 201-2** as instructed on page 21.

It is necessary to remove the balance wheel from any of the machines of Class 201 to make the replacements mentioned in the above heading.

It is not necessary to remove the motor from **Machine 201-3,** as the removal of the machine driving belt disconnects the motor from the machine.

Remove Singerlight leads from **Machine 201-2** as instructed on pages 16 and 17.

Remove the feed connecting rod as instructed on pages 57 and 58.

Remove the feed forked connection and the feed regulator as instructed on pages 59 and 60.

Turn the shaft to bring first one and then the other of the two horizontal arm shaft bevel gear set screws (F10, Fig. 59) to where they will be accessible through the hole (K10, Fig. 59). Loosen the screws (F10) so that the horizontal arm shaft bevel gear (H10, Fig. 59) can be moved on the shaft. Loosen set screw (M10, Fig. 59) in the feed cam and feed lifting eccentric (L10, Fig. 59) so that it can be moved on the shaft (E10).

In this connection also see Fig. 62, which shows the shaft (E10) removed, and which also shows needle bar crank (T10), shaft bushing (H11), shaft gear (H10) and feed cam and feed lifting eccentric (L10) in the positions which these parts occupy on the shaft when installed.

Turn the horizontal arm shaft (E10) to bring the set screw (V10, Fig. 60) in the needle bar crank (T10, Fig. 60) to a position where it is accessible through the hole (W10, Fig. 60). Loosen

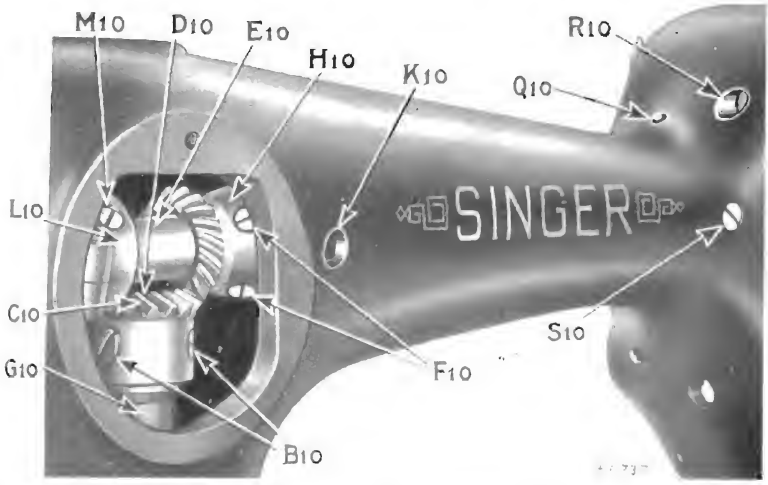

Fig. 59. To Remove Horizontal Arm Shaft
(View Through Arm Side Cover Opening)

screw (V10, Fig. 60) and remove needle bar connecting link (V3, Figs. 60 and 61) complete with stud (G7, Figs. 60 and 61) and the thread take-up crank (U10, Figs. 60 and 61). Then loosen the set screw (X10, Fig. 60) to release the thread take-up lever link hinge stud (Y10) which retains the thread take-up lever assembly (shown removed in Fig. 61) and remove this assembly of parts from the machine arm. Should difficulty be experienced in removing the thread take-up lever link hinge stud from the machine arm, this stud (Y10, Figs. 60 and 61) can be pushed out by inserting a small screwdriver in the hole (R10, Fig. 59) in the machine arm.

Remove screw (P10, Fig. 56) in the clamp stop motion flanged bushing (O10, Fig. 56). Place a brass rod of the proper diameter against the balance wheel end of the arm shaft at (N10, Fig. 56) and carefully tap the shaft (E10) out of the clamp stop motion bushing (O10) and the horizontal arm shaft bearing at (Z10, Fig. 56). Through the arm side cover opening, hold the feed cam and feed lifting eccentric (L10) toward the balance wheel end of the machine and, from the front end of the machine arm, remove the shaft (E10) from the feed cam and feed lifting eccentric (L10), the shaft gear (H10), and the horizontal arm shaft bushing H11, Fig. 62).

Note. When removing horizontal arm shaft (E10), prevent the hub of feed cam and eccentric (L10) from damaging the teeth of the upright arm shaft gear (C10).

Should it be necessary also to remove the arm shaft bushing (H11, Fig. 62), loosen the arm shaft bushing set screw (S10, Fig. 59).

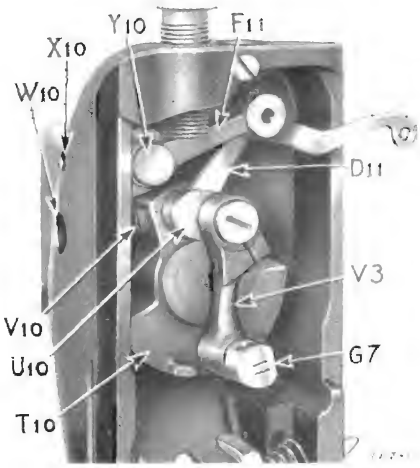

FIG. 60. FACE PLATE, NEEDLE BAR AND PRESSER BAR REMOVED FROM MACHINE

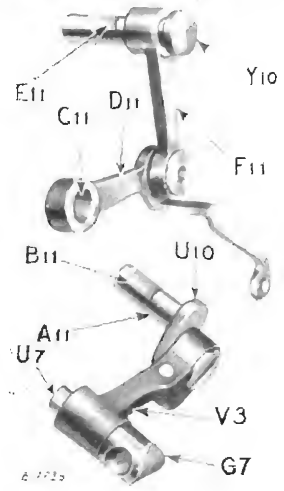

FIG. 61. THREAD TAKE-UP LEVER ASSEMBLY AND NEEDLE BAR LINK REMOVED FROM MACHINE

Insert a ¼ inch diameter brass rod of sufficient length through horizontal arm shaft rear bearing at (Z10, Fig. 56), placing the end of the rod against the inner side of arm shaft bushing (H11, Fig. 62) and tap the bushing (H11) out through the face of the machine. This tapping should be distributed over the entire inner side of the bushing, so that such force as may be required to dislodge the bushing will not be concentrated at any one point on the bushing.

When replacing, insert arm shaft bushing (H11), making sure that the oil hole (J11, Fig. 62) in this bushing is directly beneath the oil hole (Q10, Fig. 59) in the top of the machine arm, thus positioning the "flat" (G11, Fig. 62) on this bushing where the set screw (S10, Fig. 59) will be tightened against it. Insert the shaft (E10) through the arm shaft bushing (H11, Fig. 62) and when the shaft, in its movement toward the bearing in the balance wheel end of the machine, reaches the arm side cover opening, as shown in Fig. 59, place the gear (H10) on the shaft with the teeth toward the balance wheel end of the machine and in front of the upright arm shaft gear (C10) as shown in Fig. 59; then place the feed cam and eccentric (L10) on the shaft. See Fig. 62 on the following page.

When the shaft (E10) is in position in the machine arm, place on the balance wheel end of the shaft the clamp stop motion flanged bushing (O10, Fig. 56) by tapping it into position on the

shaft, using for this purpose a lead, wooden or rawhide hammer while holding, with the hand, the needle bar crank (T10, Fig. 62) against the bushing (H11). Not much tapping force is required

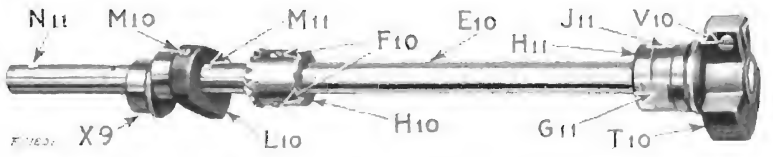

Fig. 62. Horizontal Arm Shaft Removed Showing the Positions of Needle Bar Crank, Bushing, Gear and Eccentrics on the Shaft

to properly attach the bushing (O10, Fig. 56) to the shaft. When the screw hole in the bushing (O10) exactly coincides with the screw hole (N11, Fig. 62) in the shaft (E10), insert and tighten the screw (P10, Fig. 56).

Note. Before making any further replacements, turn the shaft (E10) by hand to make sure that it rotates without the slightest drag and, at the same time, without unnecessary end play. If the clamp stop motion bushing (O10, Fig. 56) is set too tightly against the clamp stop motion bushing bearing (Z10, Fig. 56) it will cause the needle bar crank (T10, Fig. 62) to bear too tightly against the needle bar crank bearing at the front end of the machine, thus binding the shaft (E10) instead of permitting it to rotate freely. In such case, place a brass rod against the balance wheel end of the shaft and tap at that end of the shaft to lessen the contact between the clamp stop motion bushing (O10) and the bearing (Z10, Fig. 56), also between the needle bar crank (T10) and the bearing (H11). On the other hand, if too much end play exists in the shaft, slightly loosen the screw (P10, Fig. 56) and tap the bushing (O10) to remove the surplus end play, then tighten screw (P10).

Place the horizontal arm shaft bevel gear (H10) in mesh with the upright arm shaft upper bevel gear (C10, Fig. 59) and tighten the two screws (F10), making certain that one of them engages the "flat" on the shaft (E10). The meshing of the gears (C10) and (H10) must be sufficiently close to prevent backlash and, at the same time, not close enough to bind and thus interfere with the free rotation of the shaft. Turn the shaft (E10) by hand to determine that the meshing of these two gears is correct. Adjustment of the meshing of these two gears is made entirely at the horizontal arm shaft gear (H10) by setting it closer to or farther away from gear (C10, Fig. 59).

Next, lightly tighten the set screw (M10) in the cam and eccentric (L10), so that the inner end of the screw (M10) is in the

V-groove, one end of which is visible at (M11) in Fig. 62, and at the same time so that this feed cam and feed lifting eccentric (L10) can be adjusted forward or backward on the shaft within the limits of the V-groove (M11).

Replace the feed forked connection and feed regulator as instructed on page 60, and set for proper lengthwise adjustment of the feed dog as instructed on page 50.

Replace the feed connecting rod as instructed on pages 58 and 59, making certain that the feed connecting rod cap is replaced in the same position as before removal, as cautioned on page 59.

After replacement of the feed forked connection and the feed connecting rod, finally tighten the set screw (M10) in the feed cam and feed lifting eccentric (L10) after making certain that, when the lower end of the feed connecting rod is properly attached as instructed on page 59, the feed cam and eccentric (L10) is so positioned on the shaft (E10) that neither the counterbalance (L10) nor the feed cam (X9) presses against a side of the upper end of the feed connecting rod. Pressure on either side would "spring" the feed connecting rod in the opposite direction and cause binding between the upper end of the feed connecting rod and the feed cam and eccentric as well as at the hinge screw bearing at the lower end of the feed connecting rod, thus retarding the free running of the sewing machine.

Replace the thread take-up lever assembly as shown in Figs. 60 and 61 and tighten the set screw (X10, Fig. 60) against the "flat" (E11, Fig. 61) on the stud (Y10, Fig. 61) after being sure that the stud (Y10) is pushed home, but not tightly enough to retard the free movement of the link (F11).

Replace the needle bar connecting link (V3, Figs. 60 and 61) inserting the thread take-up crank stud (A11, Fig. 61) through the hole (C11) in the link (D11) and into the hole in the needle bar crank (T10). Tighten the set screw (V10, Fig. 60) against the "flat" (B11) on the stud (A11) after making sure that this connection is without perceptible play and, at the same time, the action at this point is entirely free.

Replace the needle bar as instructed on pages 56 and 57 and set for correct height as instructed on page 46.

Time the rotating hook as instructed on pages 44 and 45.

Replace the presser bar as instructed on page 55 and set for correct height as instructed on page 55.

Replace motor as instructed on page 25, and replace the balance wheel as instructed on page 26.

Replace the Singerlight leads as instructed on pages 18 and 19.

Replace face plate, arm side cover and stitch indicator plate.

To Oil the Machine

If used continuously, the machine should be oiled each day With moderate use an occasional oiling is sufficient. Oil should be applied at each of of the places indicated by arrows in Figs. 63 to 67, inclusive. One drop of oil at each oiling point is sufficient. Oil holes are provided for bearings which can not be directly reached.

Fig. 63. Front View, Showing Oiling Points

Remove the thumb screw (A, Fig. 63) near the lower end of the face plate, and loosen the screw (D, Fig. 64) near the upper end of the face plate, then raise the face plate and slip it off over the head of the screw (D). Apply one drop of oil at each of the places indicated by arrows in Fig. 64.

Draw to the left the slide plate in the bed of the machine. See that the thread take-up lever is raised to its highest position, then apply oil to the sewing hook race in the bobbin case and oil hole as indicated by the arrows in Fig. 65.

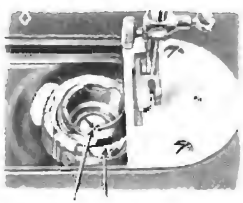

Fig. 65
View of Sewing Hook
Showing Oiling Points

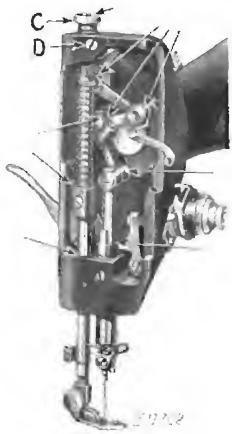

Fig. 64. End View,
Showing Oiling Points

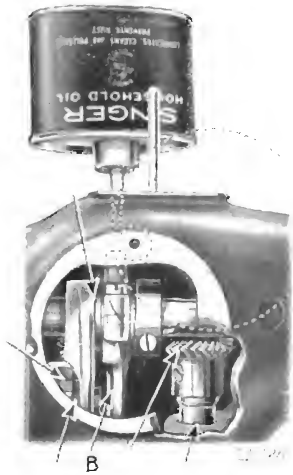

FIG. 66. OILING POINTS AT THE BACK OF THE MACHINE. (ARM BROKEN AWAY TO SHOW OIL HOLE)

Loosen the thumb screw at the rear side of the machine and turn aside the cover plate as indicated by the dotted line in Fig. 66. Rotate the balance wheel until the connecting rod indicated by (B) in Fig. 66 is at its highest position. Apply a few drops of oil, through the hole in the top of the machine, to the wick which is retained in the cap of the connecting rod as indicated in Fig. 66. Also oil the other moving parts and oil hole inside the machine arm, then turn the cover plate to its original position and fasten it by tightening the thumb screw.

To reach the parts in the bed of the machine, turn the machine back on its hinges. Apply oil to the oil holes and bearings indicated by the arrows in Fig. 67.

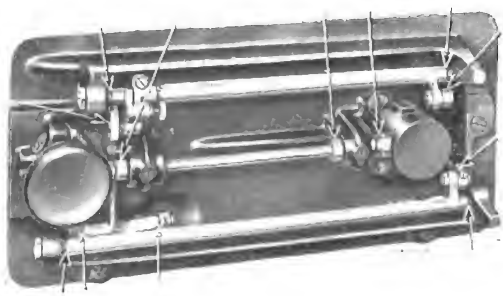

FIG. 67. OILING POINTS IN BASE OF MACHINE

THE IMPORTANCE OF USING SINGER LUBRICANTS FOR YOUR SEWING MACHINE

"The Best is the Cheapest"

Use Singer Oil on Machine

Knowing from many years' experience the great importance of using good oil, we put up an extra quality machine oil, in cans, especially prepared for sewing machines.

Use Singer Motor Lubricant on Motor

The Singer Motor Lubricant is especially prepared for lubricating the gears and bearings of the electric motor. This is a pure non-flowing compound which retains its consistency and possesses high lubricating qualities.

Genuine Singer Needles should be used in Singer Machines.
These Needles and their Containers are marked with the Company's Trade Mark "SIMANCO." 1

Needles in Containers marked "For Singer Machines" are not Singer made needles. 2

This Trade Mark is on the Arm
of Every Singer Sewing Machine